ITEM #	QTY	NEWMAR #	DESCRIPTION
1	1	161665	HAND RAIL ASSEMB PWDR COAT

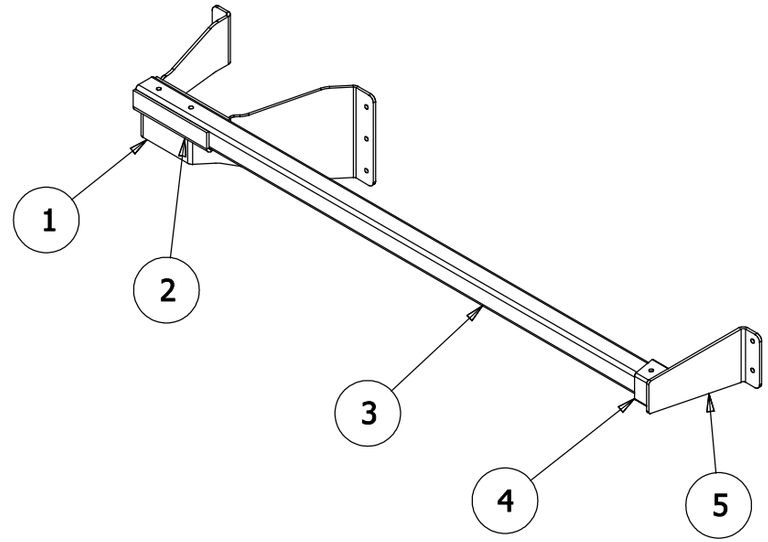

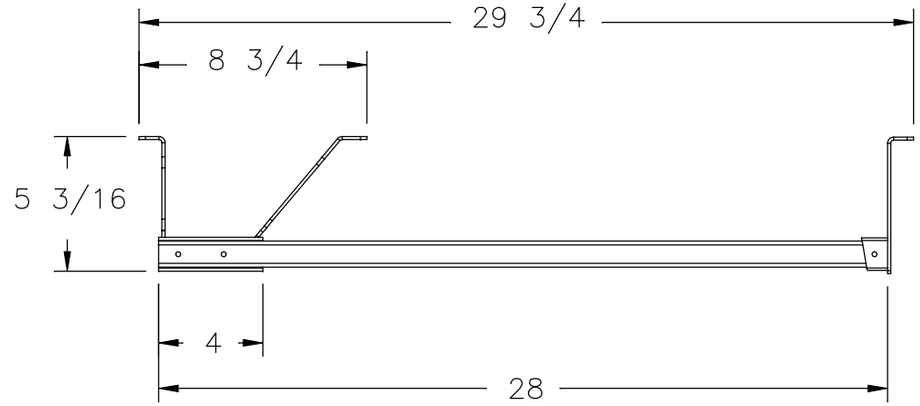

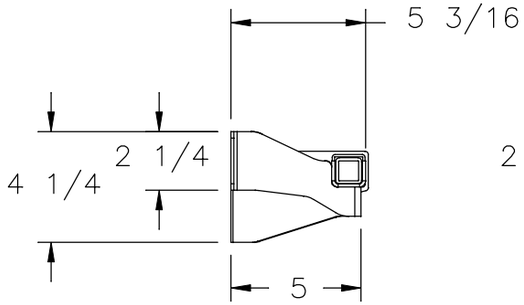

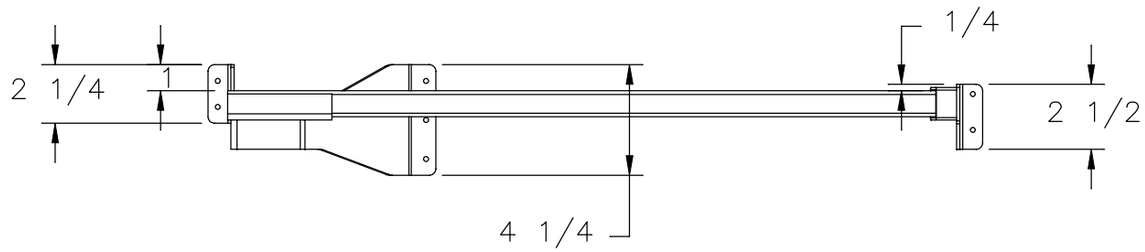

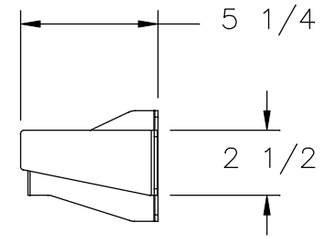

ASSEMBLY VIEW

NOTE: MATERIAL IS 11 GA. STEEL

NEWMAR CORP P.O. Box 30, Nappanee, IN. 46550	Model: DS DP	Sheet 1 OF 5	Drawn by: T. T. S.	Checked by: V. K.	Revision:	By:
						Date:
UNITS: INCHES	Title: DASH GRAB HANDLE	I.D. # 2023\DP\FRAME\PARTS\DS_GRB_HNDL	Date: 9/1/21	Date: 11/18/21	Revision:	By:
TITLE BLOCK: 1TB						Date:

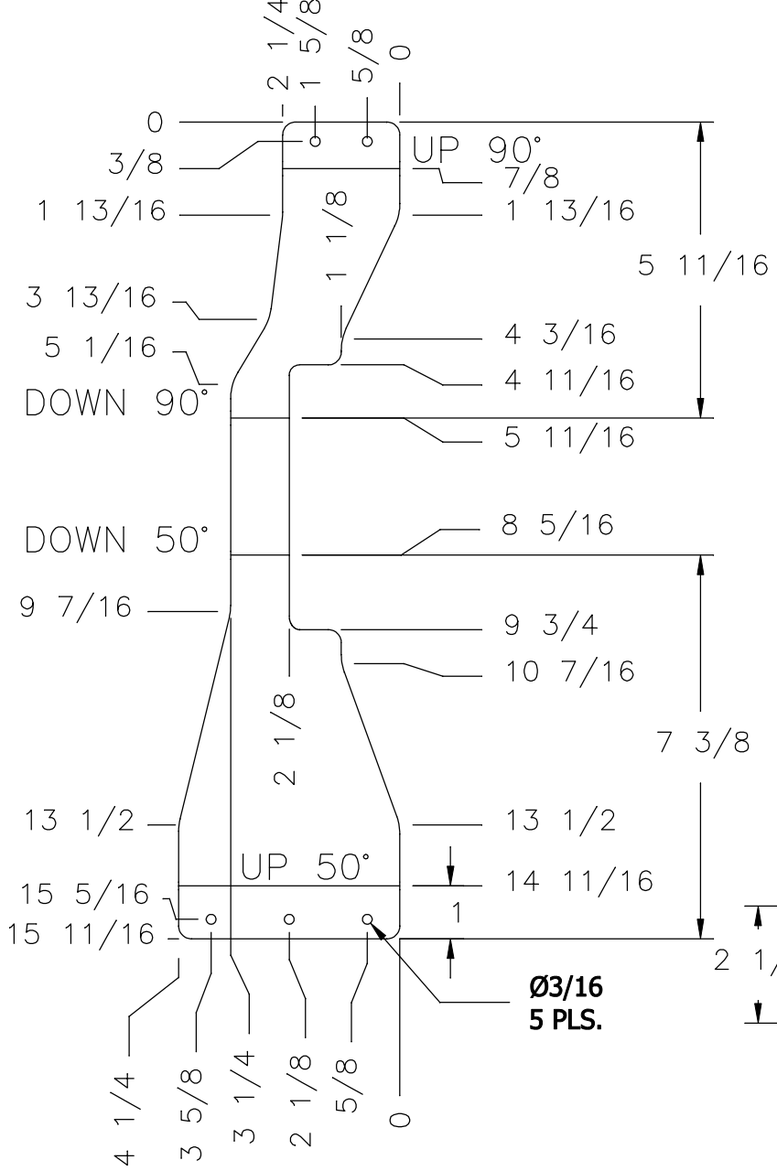

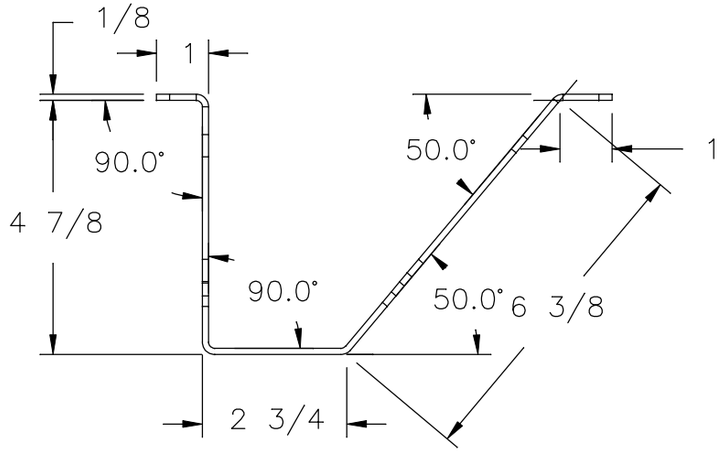

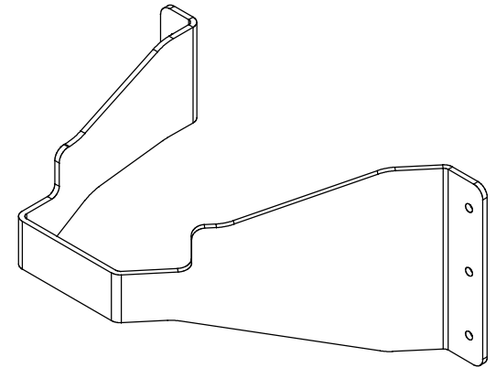

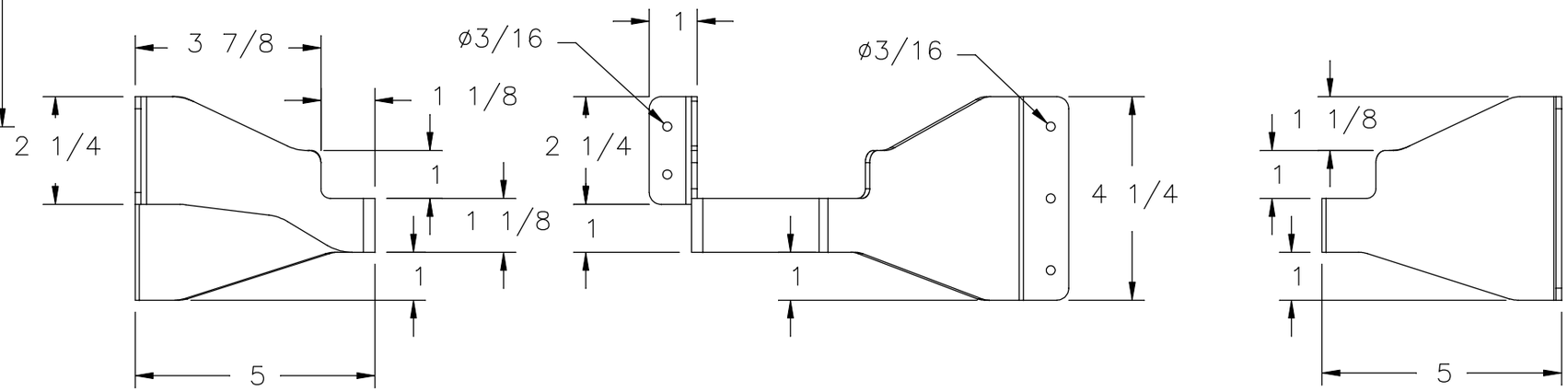

PART 1

SCALE: 2x

NOTE: MATERIAL IS 11 GA. STEEL

NEWMAR CORP *P.O. Box 30,* *Nappanee, IN. 46550*	Model: DS DP	Sheet 2 OF 5	Drawn by: T. T. S.	Checked by: V. K.	Revision:	By:
						Date:
UNITS: INCHES	Title: DASH GRAB HANDLE	I.D. # 2023\DP\FRAME\PARTS\DS_GRB_HNDL	Date: 9/1/21	Date: 11/18/21	Revision:	By:
TITLE BLOCK: 1TB						Date:

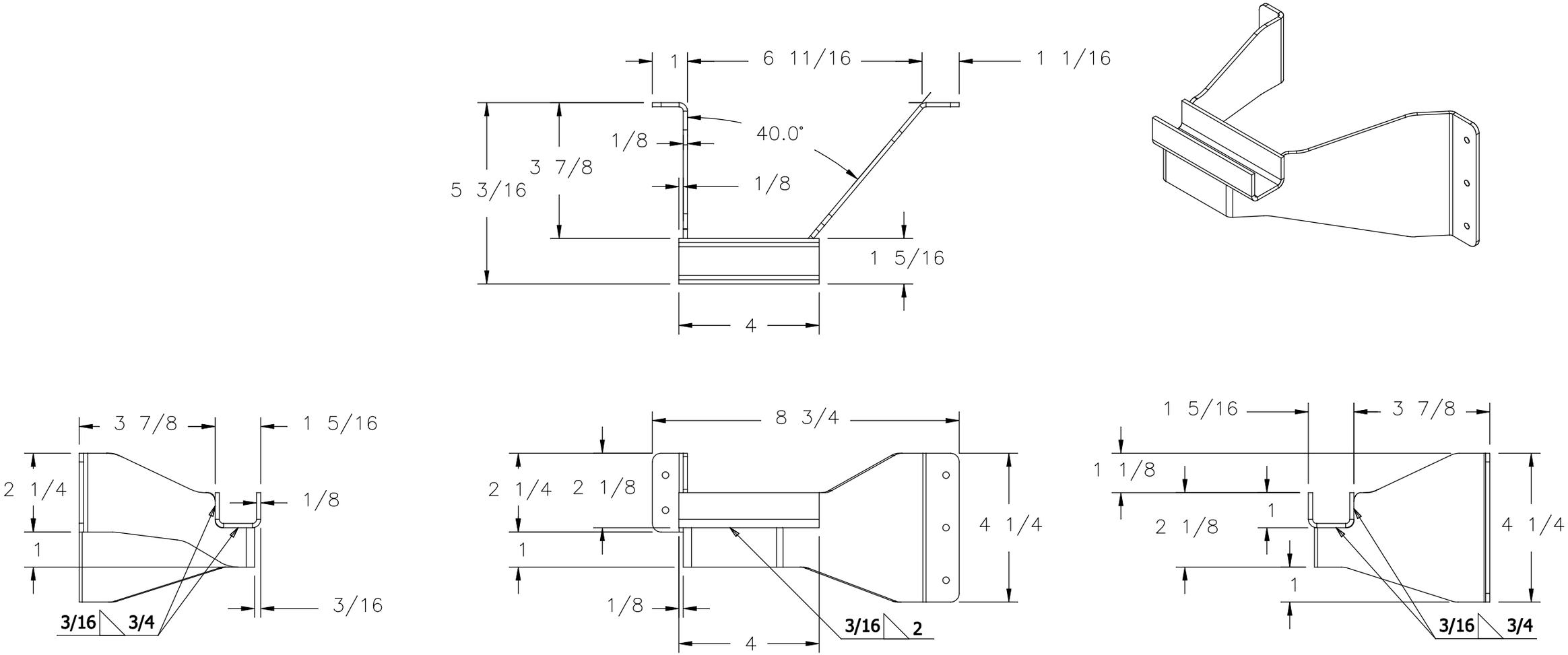

PARTS 1 & 2

SCALE: 2x

NOTE: MATERIAL IS 11 GA. STEEL

NEWMAR CORP *P.O. Box 30,* *Nappanee, IN. 46550*	Model: DS DP	Sheet 3 OF 5	Drawn by: T. T. S.	Checked by: V. K.	Revision:	By:
						Date:
UNITS: INCHES	Title: DASH GRAB HANDLE	I.D. # 2023\DP\FRAME\PARTS\DS_GRB_HNDL	Date: 9/1/21	Date: 11/18/21	Revision:	By:
TITLE BLOCK: 1TB						Date:

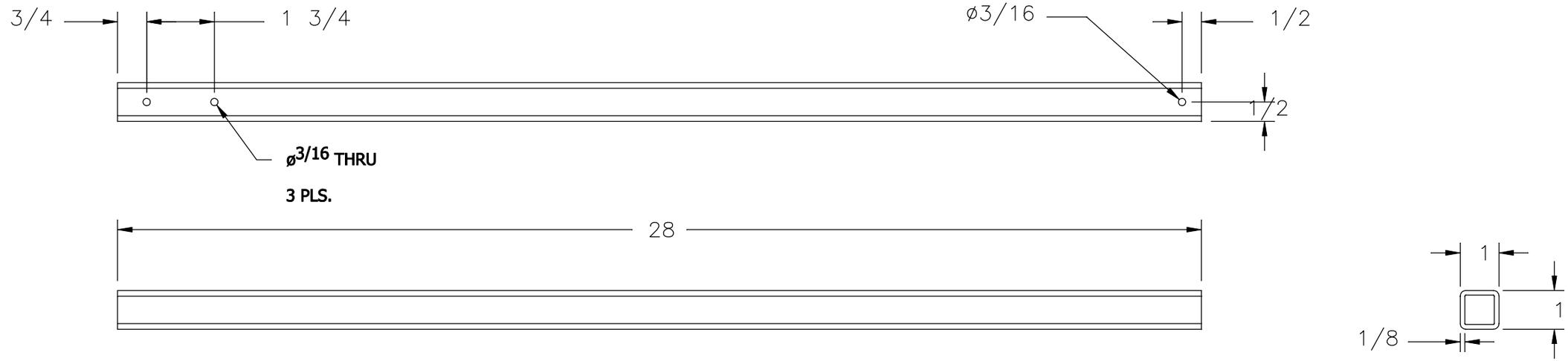

PART 3

SCALE: 2x

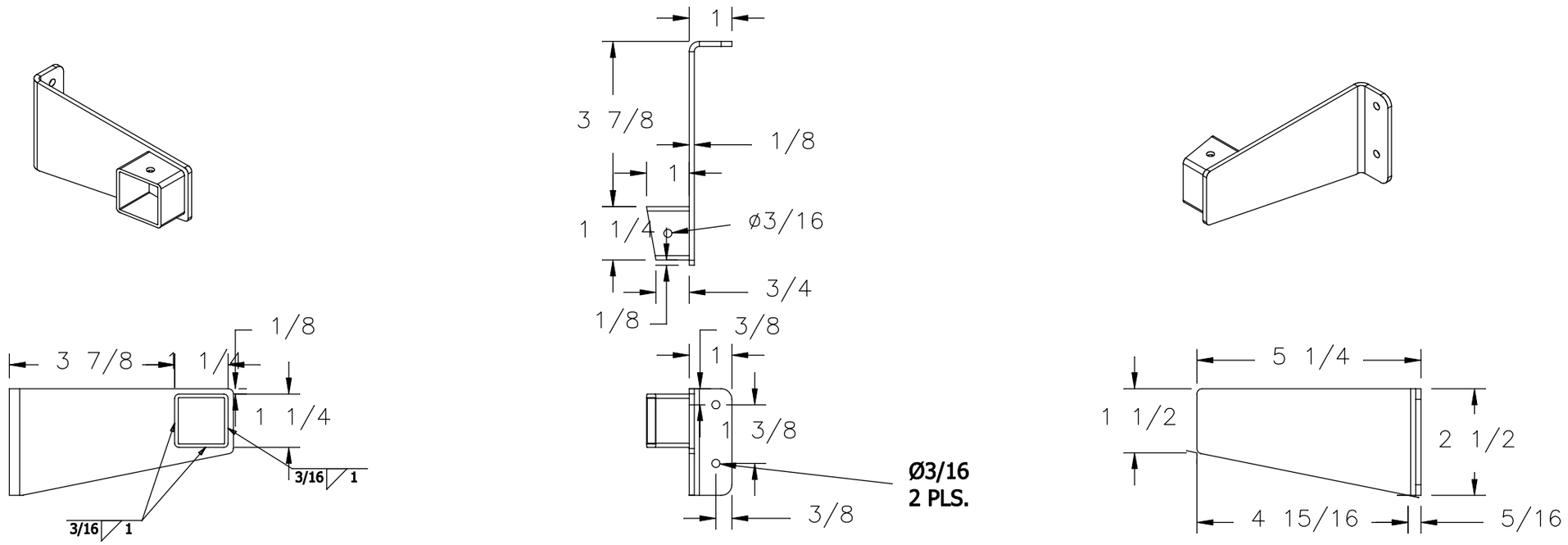

PARTS 4 & 5

SCALE: 2x

NOTE: MATERIAL IS 11 GA. STEEL

NEWMAR CORP *P.O. Box 30,* *Nappanee, IN. 46550*	Model: DS DP	Sheet 4 OF 5	Drawn by: T. T. S.	Checked by: V. K.	Revision:	By:
						Date:
UNITS: INCHES	Title: DASH GRAB HANDLE	I.D. # 2023\DP\FRAME\PARTS\DS_GRB_HNDL	Date: 9/1/21	Date: 11/18/21	Revision:	By:
TITLE BLOCK: 1TB						Date:

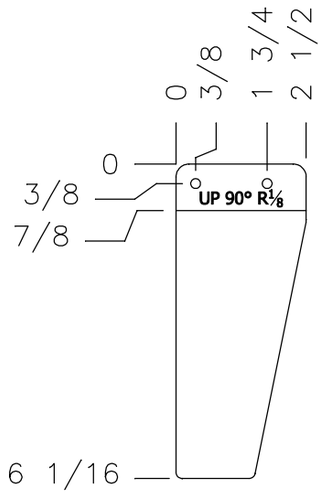

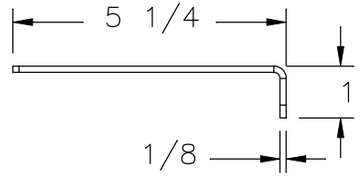

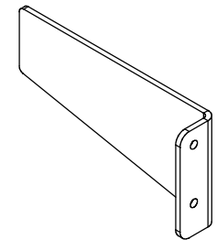

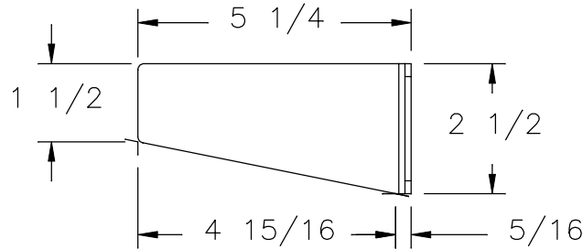

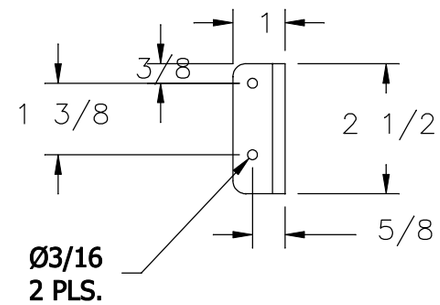

PART 5

SCALE: 2x

NOTE: MATERIAL IS 11 GA. STEEL

NEWMAR CORP *P.O. Box 30,* *Nappanee, IN. 46550*	Model: DS DP	Sheet 5 OF 5	Drawn by: T. T. S.	Checked by: V. K.	Revision:	By:
						Date:
UNITS: INCHES	Title: DASH GRAB HANDLE	I.D. # 2023\DP\FRAME\PARTS\DS_GRB_HNDL	Date: 9/1/21	Date: 11/18/21	Revision:	By:
TITLE BLOCK: 1TB						Date: