ITEM #	QTY	NEWMAR #	DESCRIPTION
1	1	161825	BRKT DOOR MAGNET SWT

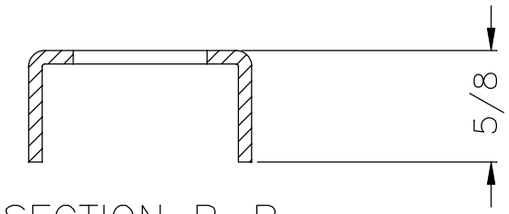

SECTION B–B

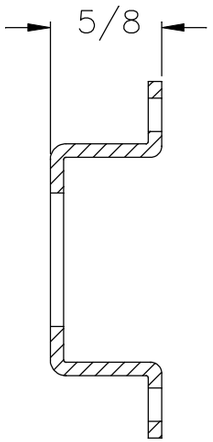

SECTION A–A

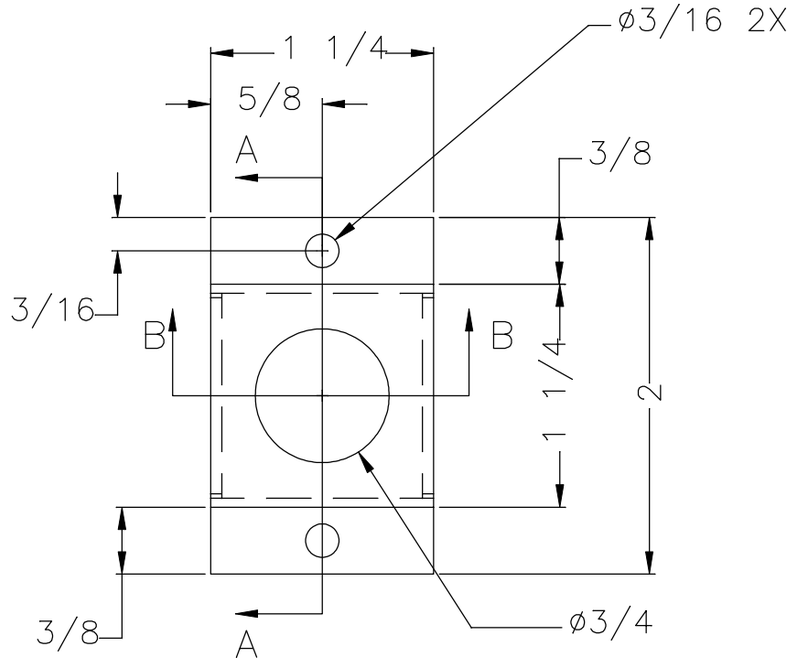

TOP VIEW

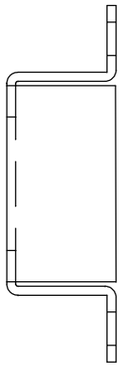

RIGHT SIDE VIEW
LEFT SIDE OPPOSITE

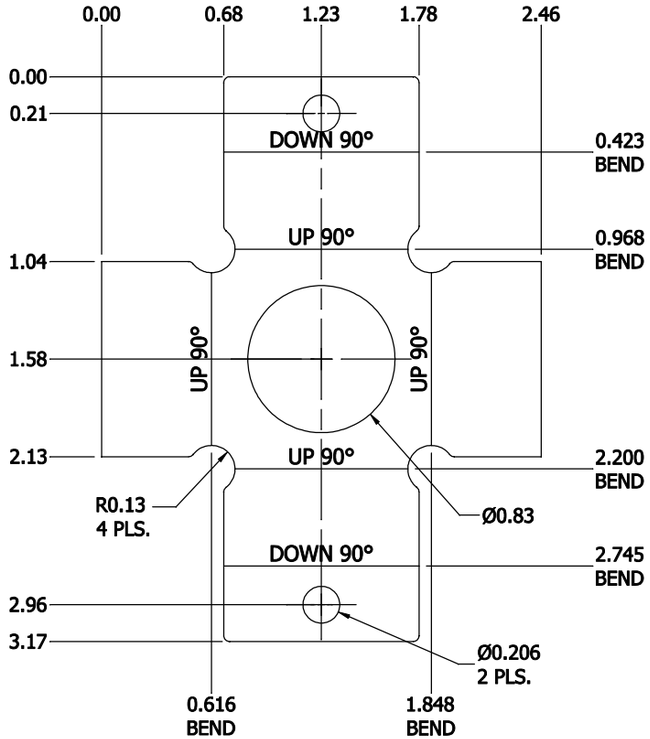

FLAT VIEW

14 GA STEEL POWDER COATED BLACK

NEWMAR CORP P.O. Box 30, Nappanee, IN. 46550	Model: (SEE INDEX)	Sheet 1 OF 1	Drawn by: G. Y.	Checked by: M. N.	Revision: ADDED FLAT PATTERN VIEW FOR VENDOR. (PCR #231945)	By: N. S. Date: VK 6/16/22
UNITS: INCHES TITLE BLOCK: 1–2FULTB	Title: SWITCH MAG BRKT DOOR	I.D. # 2023\HE\FRAME\PARTS\MAGNETIC_SWITCH_BRACKET_3	Date: 1/4/22	Date: 1/6/22	Revision: MODEL CHANGED TO SEE INDEX PER (2023 ECO #204)	By: B. B. Date: BB 6/2/22