ITEM #	QTY	NEWMAR #	DESCRIPTION
4	2	161962	BRKT 43-3/8", FRESH WATER TANK (SACC 4051, 4061)

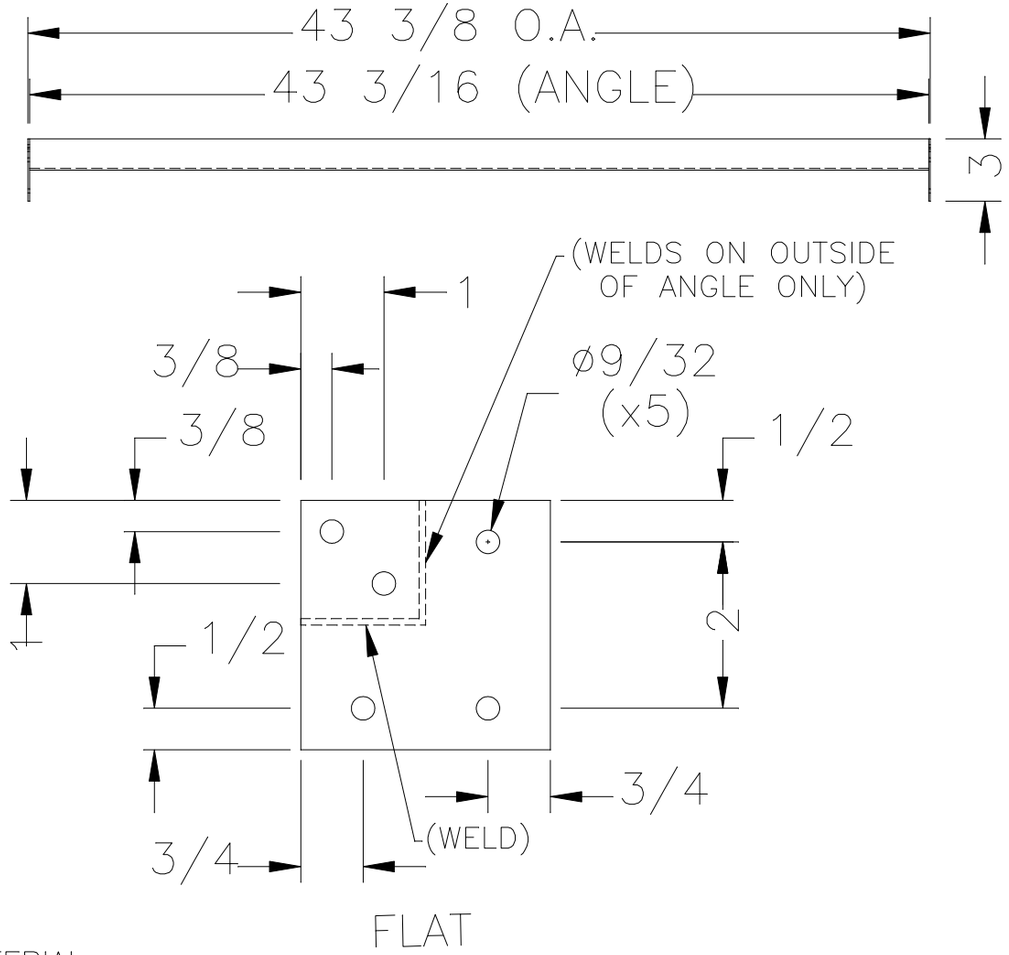

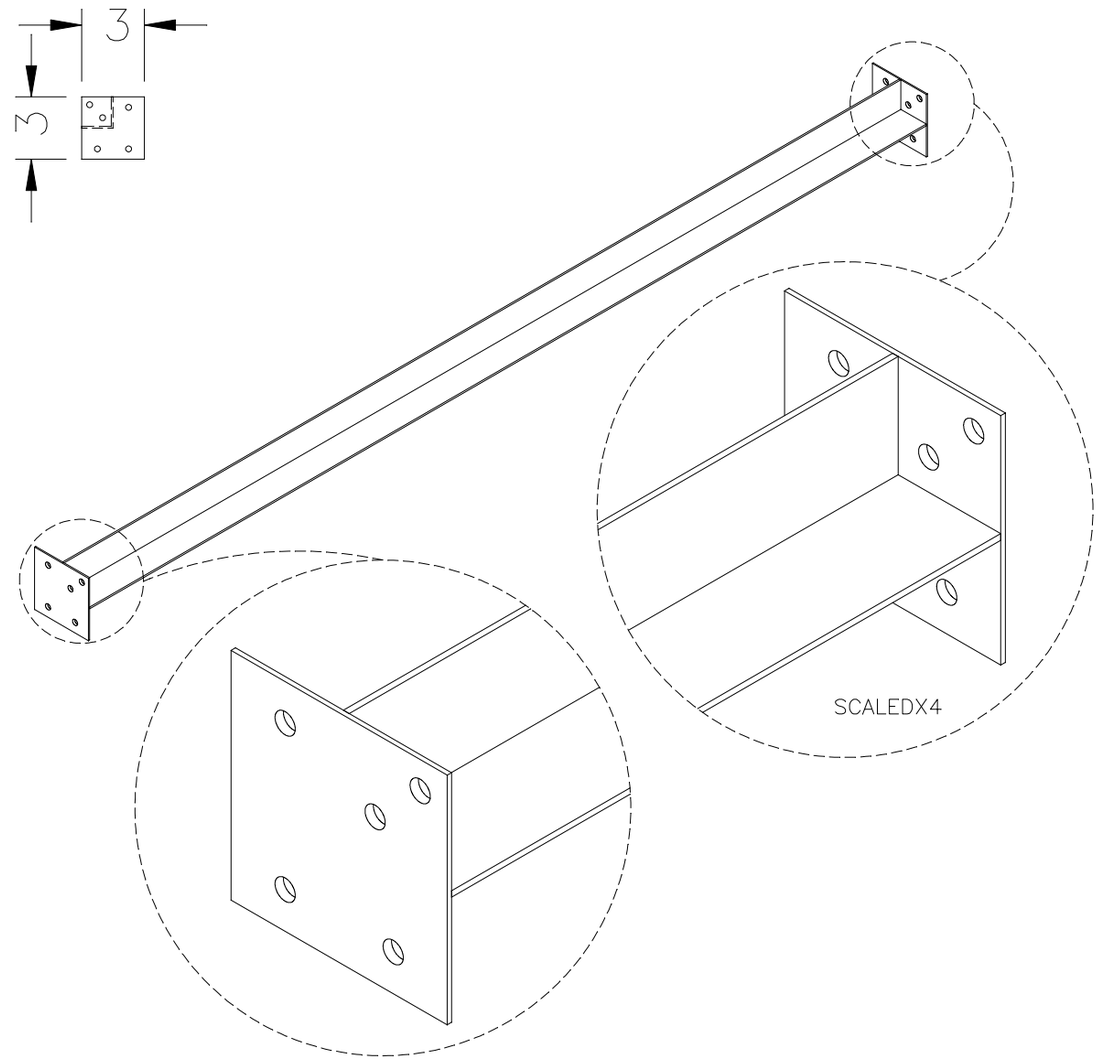

MATERIAL:

1 1/2" X 1 1/2" X 11 GA STEEL; PAINTED BLACK

14 GA FLAT; PAINTED BLACK

NEWMAR CORP P.O. Box 30, Nappanee, IN. 46550	Model: SSCC/SACC	Sheet 4 OF 5	Drawn by: M. R.	Checked by: M. N.	Revision: Changed the fresh tank bracket quantity to 2 ILO 3 due to changing to 3/4 galvanized pipe strap and 1x2x28 luan to support the off door side of the fresh tank (2022 ECO #791) — By: R. W. Date: EC 3/25/22
UNITS: INCHES TITLE BLOCK: 1TB	Title: BRACKET FRESH WATER TANK	I.D. # 2023\CC\FRAME\PARTS\BRACKET_FRESH_WATER_TANK	Date: 1/4/22	Date: 1/7/22	Revision: Increased the hole sizes on the end plates of the tank bracket to be 9/32 ILO 3/16 due to production currently needing to drill holes to fit the .25 fasteners specified on the tank securement print (2022 ECO #767) — By: R. W. Date: MN 2/24/22