ITEM #	QTY	NEWMAR #	DESCRIPTION
1	1	162067	LADDER BUNK

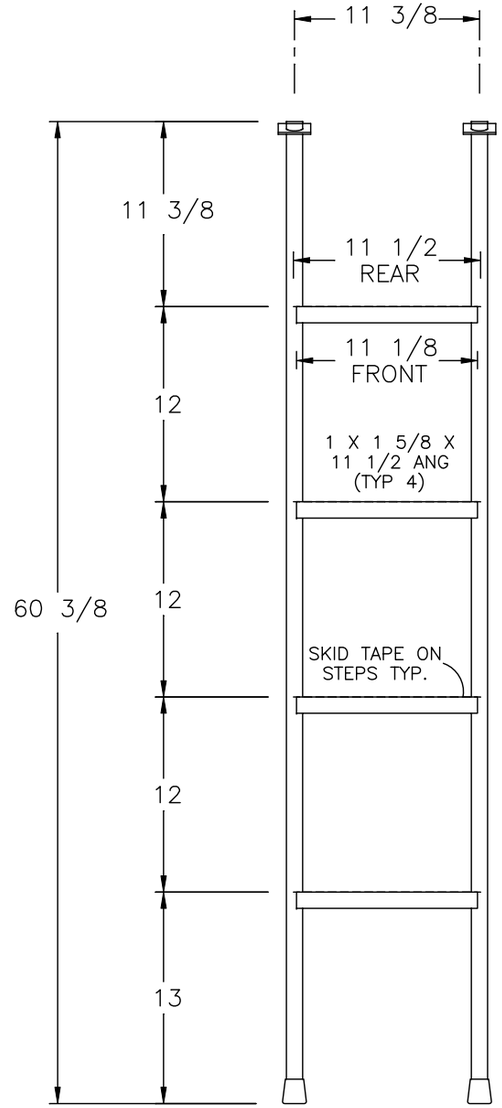

FRONT

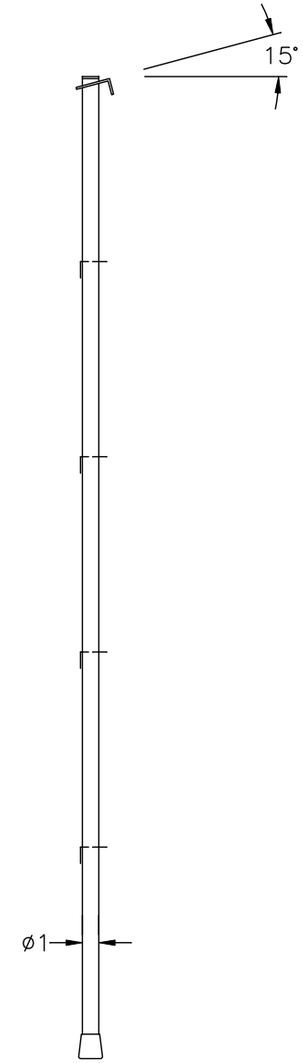

RIGHT

NEWMAR CORP P.O. Box 30, Nappanee, IN. 46550	Model: (K930)(K935) BTCA, BSCA (SEE INDEX)	Sheet 1 OF 1	Drawn by: C. C.	Checked by: D. E.	Revision: NEW PRINT (PCR #230499)	By: C. C.
						Date:DE 1/17/22
UNITS: INCHES	Title: DROP DOWN BUNK LADDER	I.D. # 2023\CA\CAB\LR\DROP_DOWN_BUNK_LADDER	Date: 1/17/22	Date: 1/17/22	Revision:	By:
TITLE BLOCK: 1TB						Date: