ITEM #	QTY	NEWMAR #	DESCRIPTION
1	1	162113	ABS COVER PLUMB W/NOTCHES BLK

NOTE:
1.COVER TO BE USED WITH WASHER/DRYER PREP OPTION (J161) ONLY
2. HAIR CELL FINISH ON OUTER SIDE OF PART

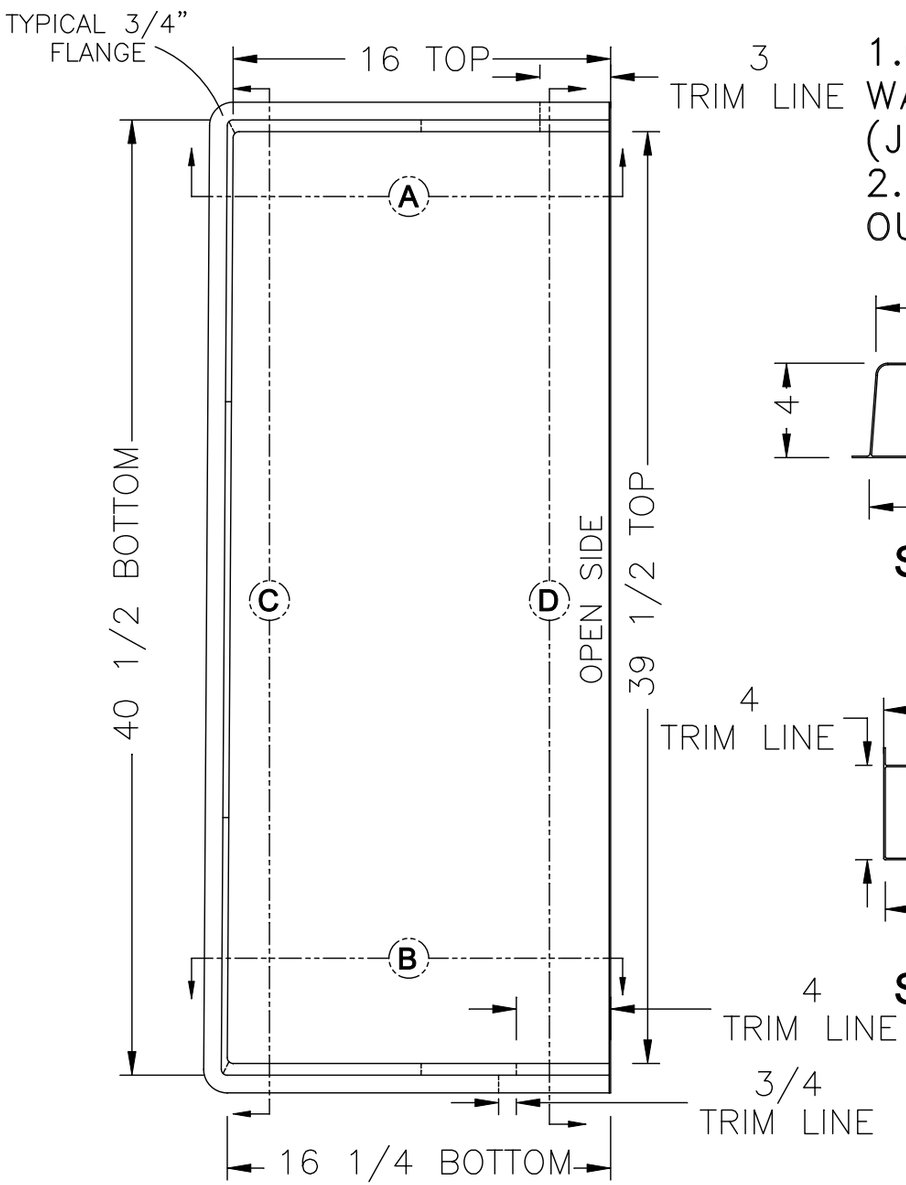

TOP VIEW

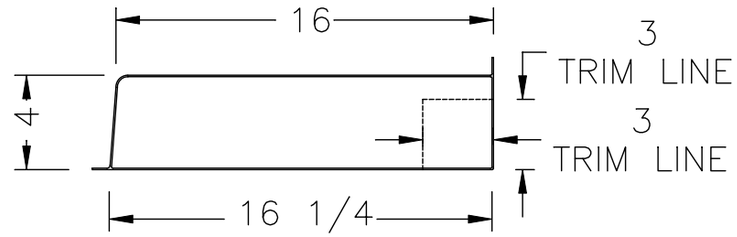

SIDE SECTION (A)

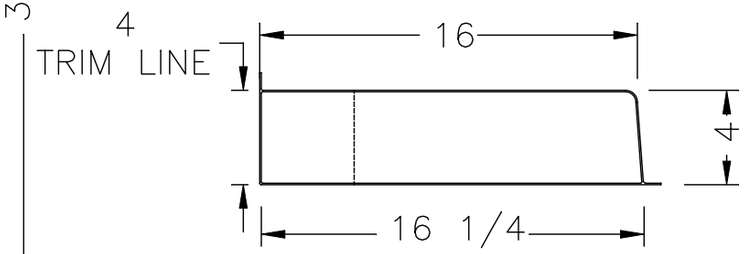

SIDE SECTION (B)

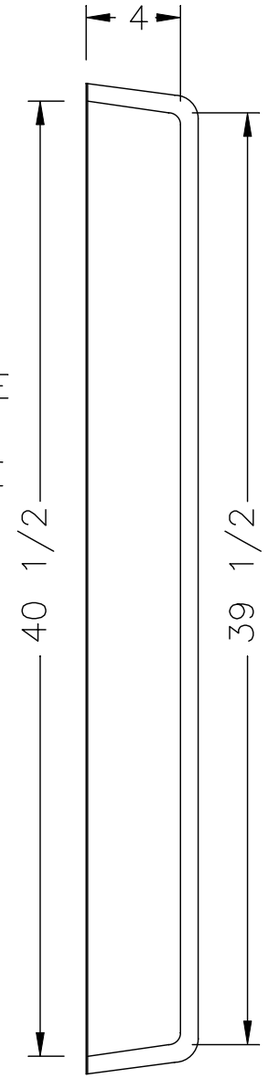

SIDE SECTION (C)

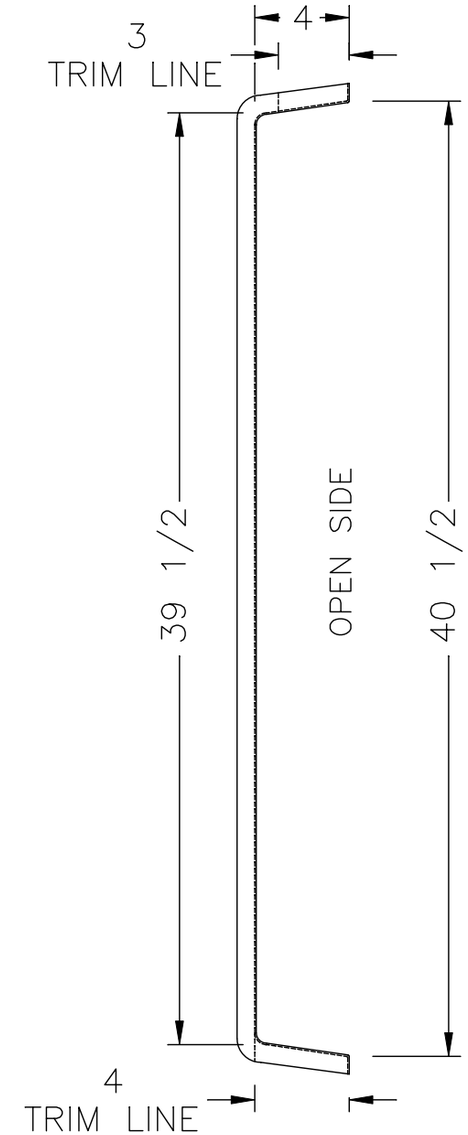

SIDE SECTION (D)

NEWMAR CORP P.O. Box 30, Nappanee, IN. 46550	Model: CSFD (SEE INDEX) (J161) (J166)	Sheet 1 OF 1	Drawn by: J. M.	Checked by: D. E.	Revision: ADDED 3"X3" TRIM LINE NOTCH IN TOP & 4"X4" TRIM LINE NOTCH IN BOTTOM; ADDED HAIR CELL FINISH LOCATION TO NOTES; ADDED #162113 ILO #143421 (PCR #230775) — By: J. M. Date: DE 1/20/22
UNITS: INCHES	Title: 40 1/2 ABS WASHER PLUMBING COVER	I.D. # 2023\CA\CAB\CSCA_WASHER_PLUMBING_COVER	Date: 8/19/21	Date: 9/10/21	Revision: ADDED "40 1/2" TO TITLE (PCR #230752) — By: J. M. Date: DE 1/19/22
TITLE BLOCK: 1-4FULTB					