ITEM #	QTY	NEWMAR #	DESCRIPTION
A	1	155814	CABINET FOOT MPL HALF
B	1	155815	CABINET FOOT MPL 90D CUT
C	1	155816	CABINET FOOT MPL 98D CUT
D	1	162159	CABINET FOOT MPL TALL 135D CUT
E	1	155817	CABINET FOOT MPL CUT (HALF)
G	1	155818	CABINET FOOT MPL 135D CUT
H	1	155819	CABINET FOOT MPL 150D CUT

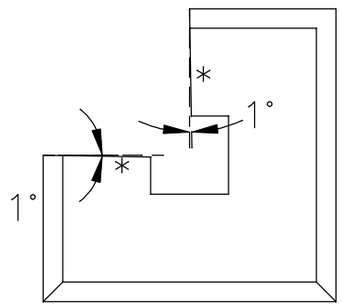

* REQIRES 1° ANGLE
ON ALL INSIDE CUTS

PROFILE

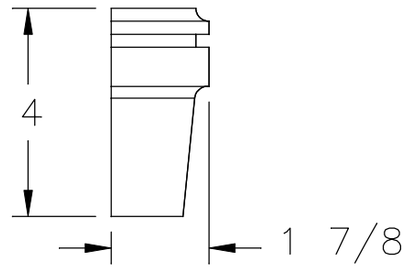

BLOCK "A"

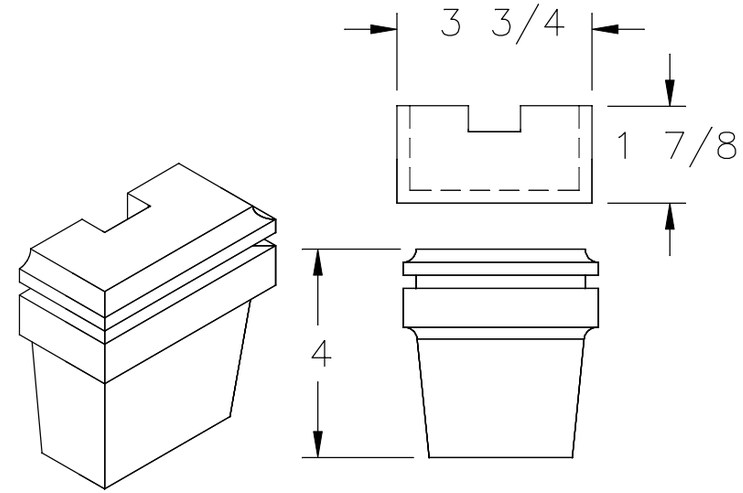

BLOCK "B"

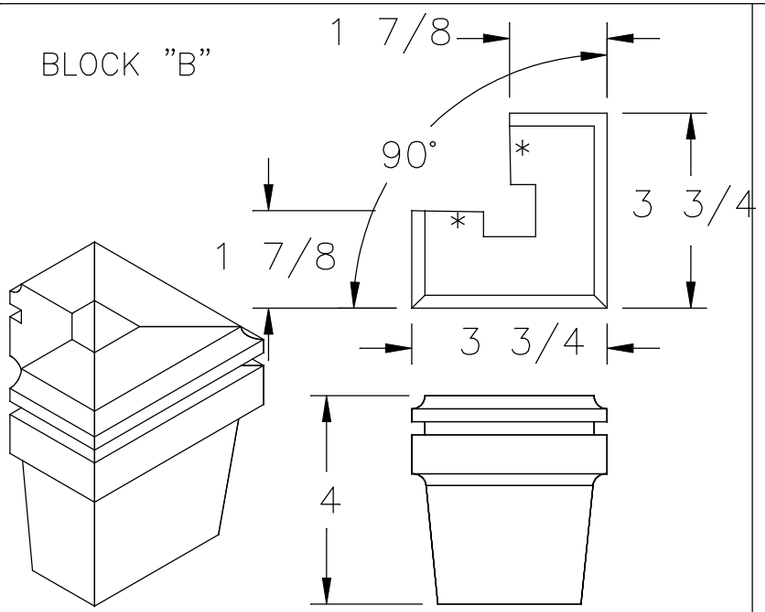

BLOCK "C"

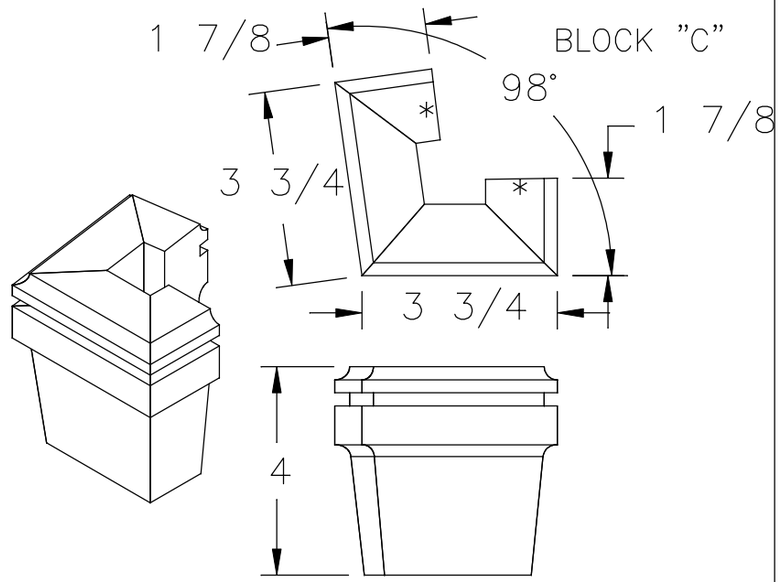

BLOCK "D"

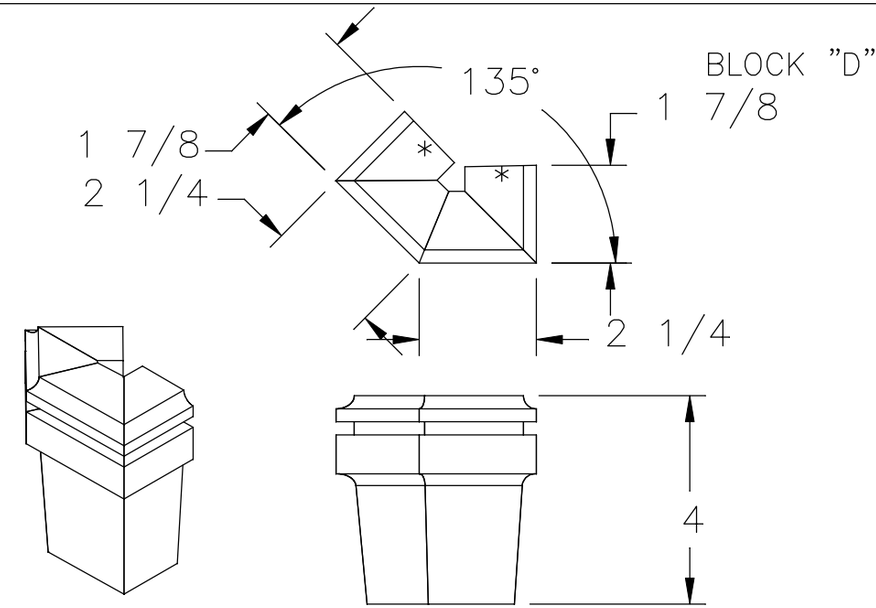

NEWMAR CORP P.O. Box 30, Nappanee, IN. 46550	Model: SEE INDEX	Sheet 1 OF 2	Drawn by: K. C.	Checked by: V. K.	Revision: ADDED TALL 135 DEGREE CUT CABINET FOOT PART # 162159 (PCR #230724) — By: K. C. — Date: VK 1/14/22
UNITS: INCHES	Title: KITCHEN BASE CABINET FEET DETAIL	I.D. # 2023\CC\CAB\KT\MISC7001	Date: 1/13/22	Date: 1/14/22	Revision: — By: — Date:
TITLE BLOCK: 1-5TB					