ITEM #	QTY	NEWMAR #	DESCRIPTION
1	1	162454	BRKT HOOD RELEASE 21BT BS CS

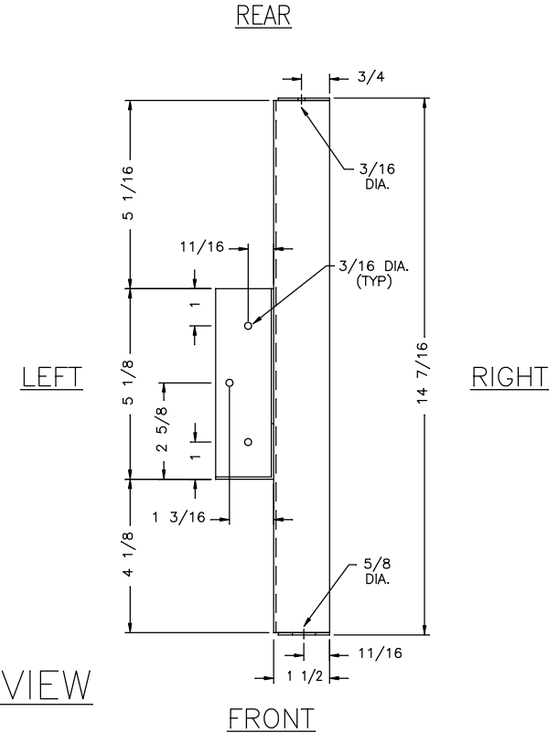

PLAN VIEW

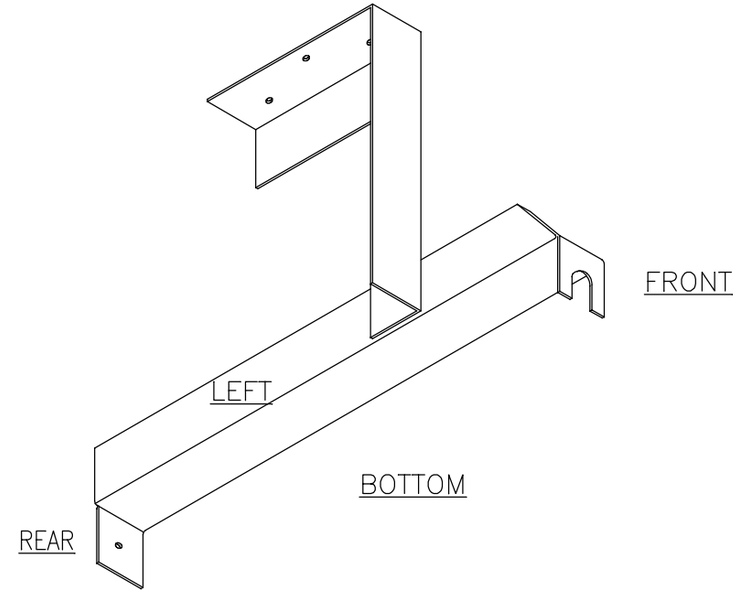

ISOMETRIC VIEW

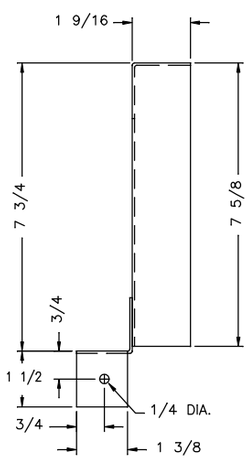

REAR VIEW

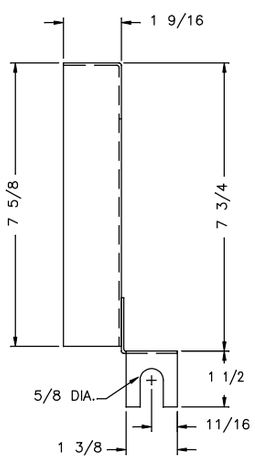

FRONT VIEW

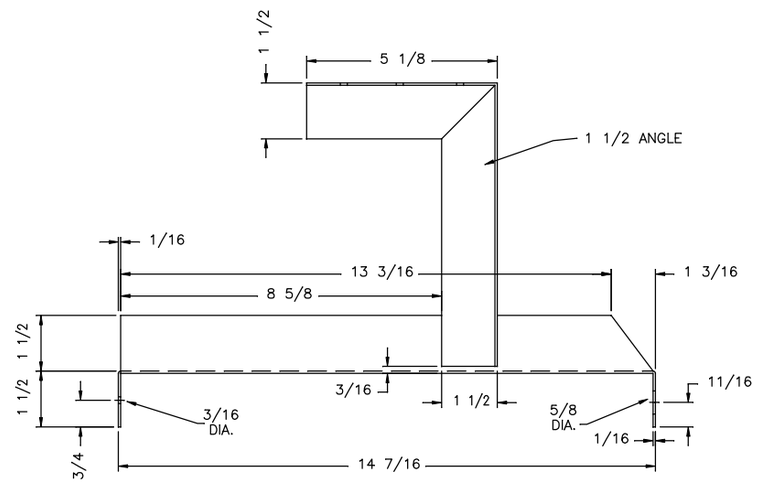

SIDE VIEW
LEFT

NEWMAR CORP *P.O. Box 30,* *Nappanee, IN. 46550*	Model: (SEE INDEX)	Sheet 1 OF 1	Drawn by: J. M.	Checked by: B. L. G.	Revision: NEW PRINT FOR 2022; OLD PATH: 2012\CA\FRAME\CS\HOOD_RELEASE_BRKT; SHORTENED REAR OF BRACKET 1/2" TO 8 5/8" ILO 9 1/8"; EXTENDED TOP OF BRACKET 1/2" TO 7 3/4" ILO 7 1/4" ADDED NEW PART #162454 ILO 81477 (2022 ECO #768) — By: J. M. — Date: BLG 2/28/22
UNITS: INCHES	Title: HOOD RELEASE BRACKET	I.D. # 2022\CA\FRAME\CS\HOOD_RELEASE_BRKT	Date: 2/24/22	Date: 2/28/22	Revision: — By:
TITLE BLOCK: 1TB					Date: