ITEM #	QTY	NEWMAR #	DESCRIPTION
1	1	162748	PANEL SWITCH DRVR LEMANS FCCC
2	1	131373	BEZEL SWITCH L-SERIES-LME END

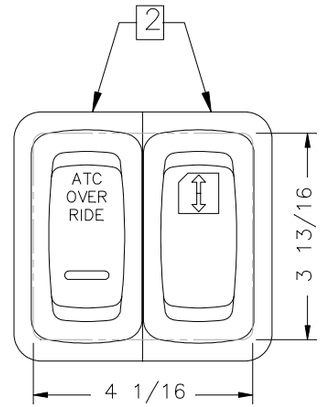

SWITCH DETAIL A
SCALE: 2x

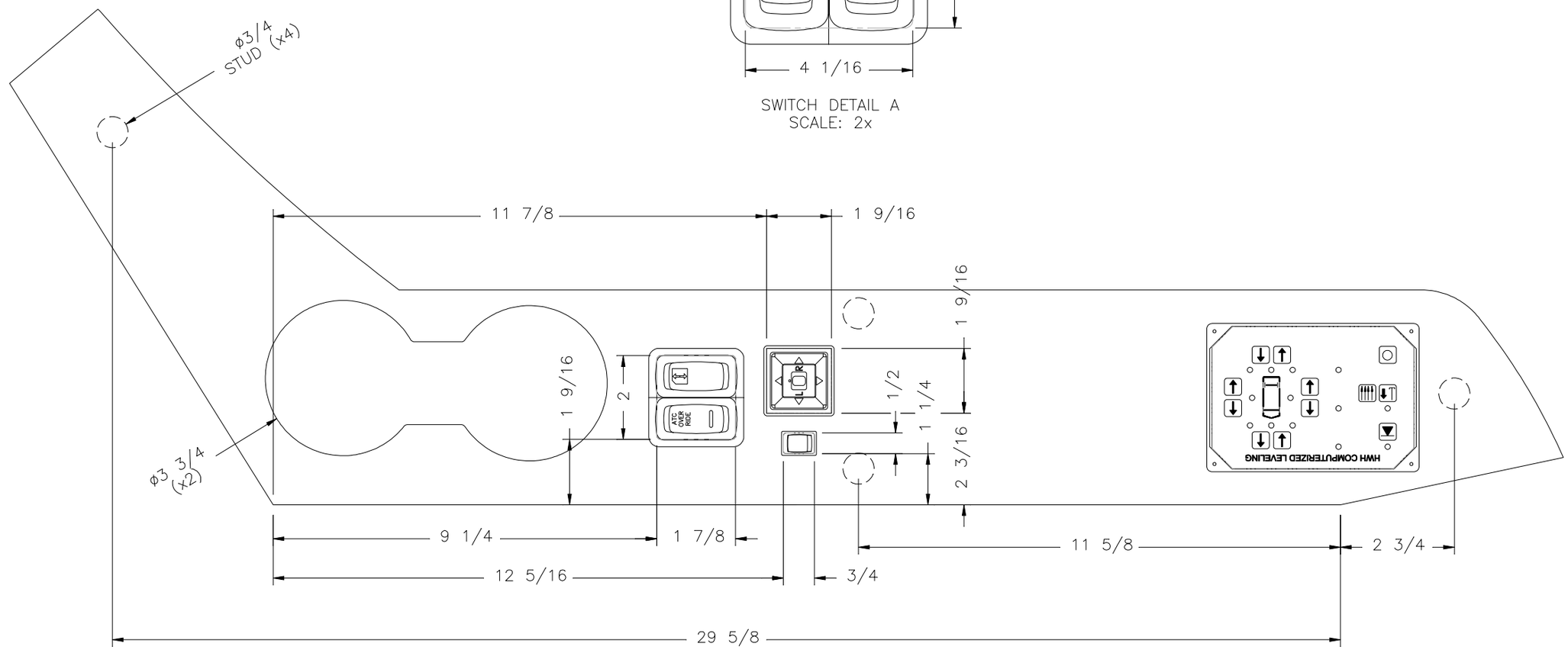

NEWMAR CORP P.O. Box 30, Nappanee, IN. 46550	Model: DS DP (SEE INDEX)	Sheet 1 OF 1	Drawn by: T. T. S.	Checked by: V. K.	Revision: CREATED NEW PRINT FOR 2023. CHANGED TO PART 162748 ILO 162131	By: T. T. S.
					DUE TO DECOR CHANGE. (PCR #232887)	Date:VK 10/4/22
UNITS: INCHES	Title: DRIVER CONSOLE 37 SWITCH PANEL (FCCC)	I.D. # 2023\COMPONENTS\162748	Date: 10/4/22	Date: 10/4/22	Revision:	By:
TITLE BLOCK: 1TB						Date: