ITEM #	QTY	NEWMAR #	DESCRIPTION
1	1	163301	BRKT HDLT DRV SIDE BOTTOM
1	1	163302	BRKT HDLT PASS SIDE BOTTOM

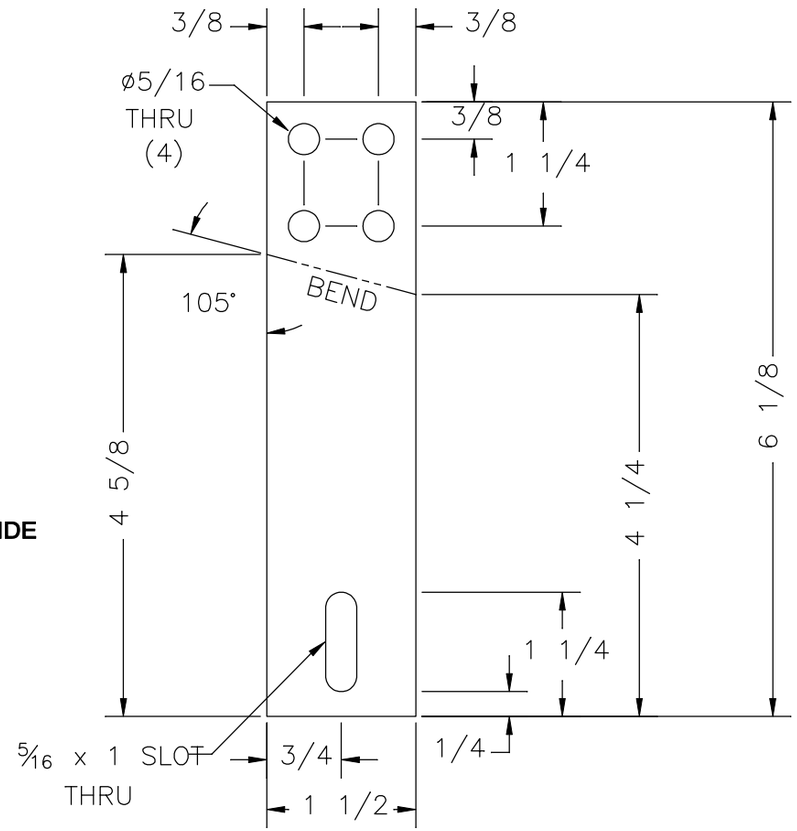

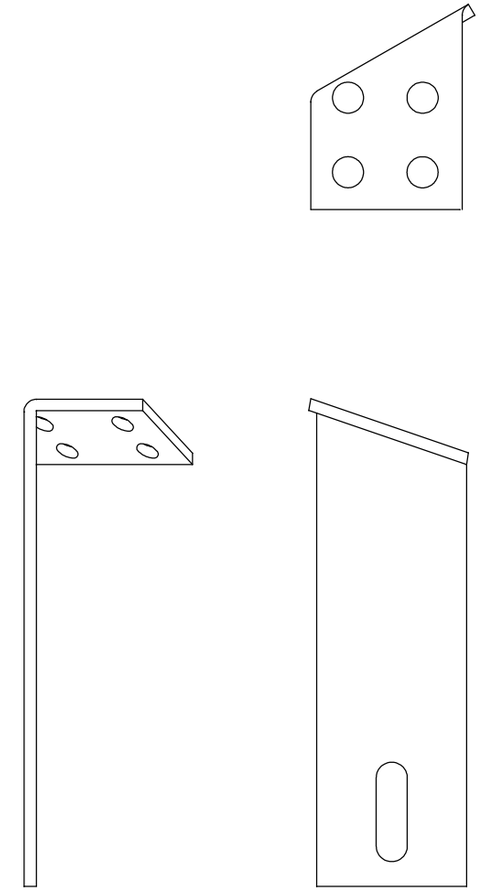

BEND UP 90° FOR DRIVER SIDE
BEND DOWN 90° FOR PASSENGER SIDE

NOTES:
MAT'L – .125 STEEL
FINISH – BLACK POWDER COAT

LOWER BRACKET

NEWMAR CORP *P.O. Box 30,* *Nappanee, IN. 46550*	Model: LA DP	Sheet 2 OF 2	Drawn by: N. L.	Checked by: B. B.	Revision: CHANGED BEND DEGREE FROM 60 TO 90, ADJUSTED DIMENSIONS TO NOT COVER THAT PART (PCR #240747) — By: N. L. — Date: BB 3/23/23
UNITS: INCHES	Title: HEADLIGHT MOUNTING BRACKETS	I.D. # 2024\HE\PROFILE\PARTS\LA_HDLT_MT	Date: 7/26/22	Date: 9/15/22	Revision: — By: — Date:
TITLE BLOCK: 1–2FULTB					