CUT PATTERN	
BACK FRAME NO.	
BASE FRAME NO.	
WOOD PATTERN	

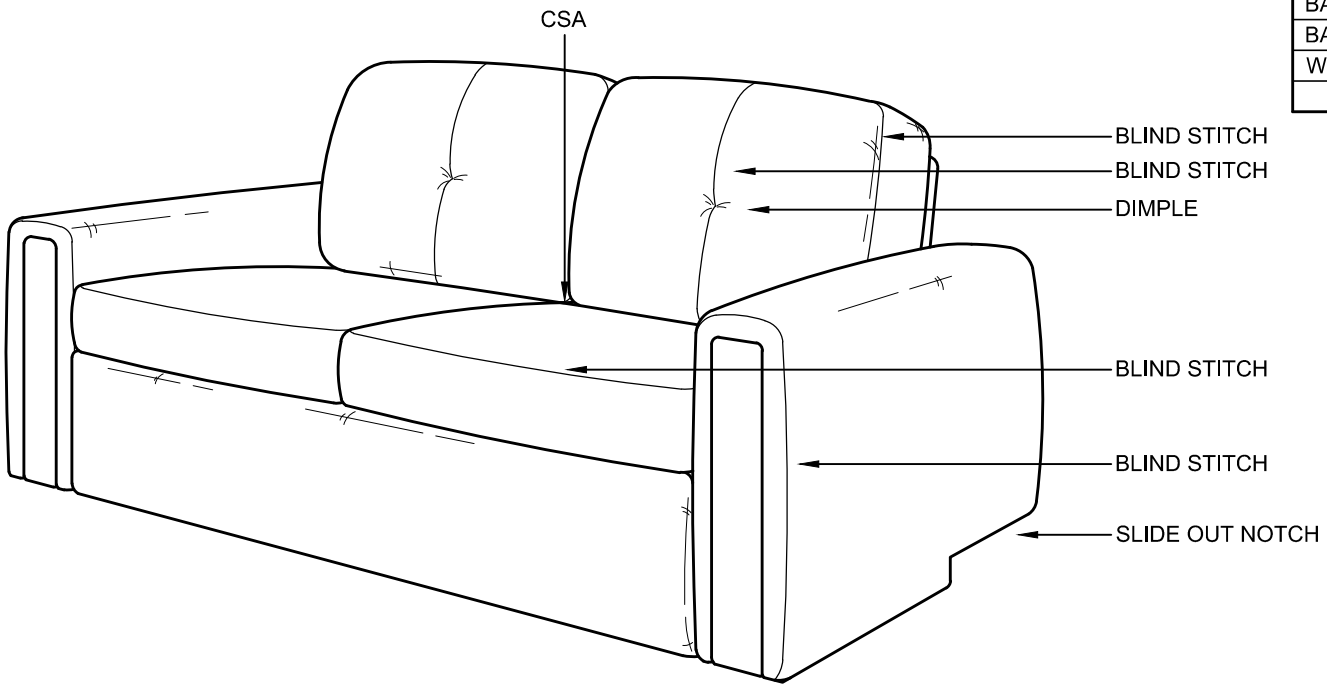

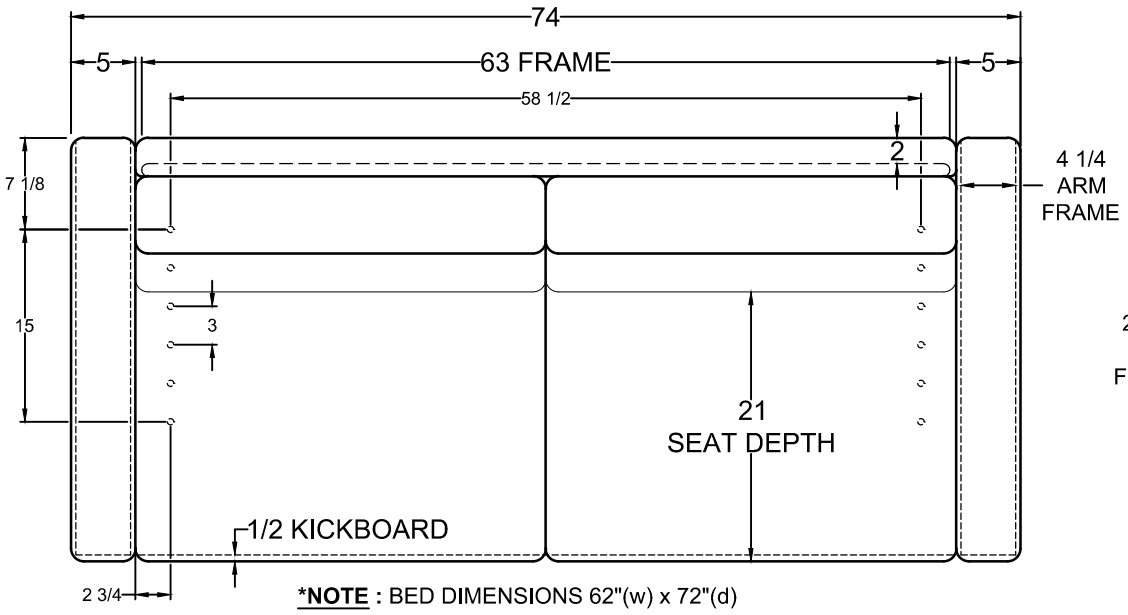

***NOTE** : BED DIMENSIONS 62"(w) x 72"(d)

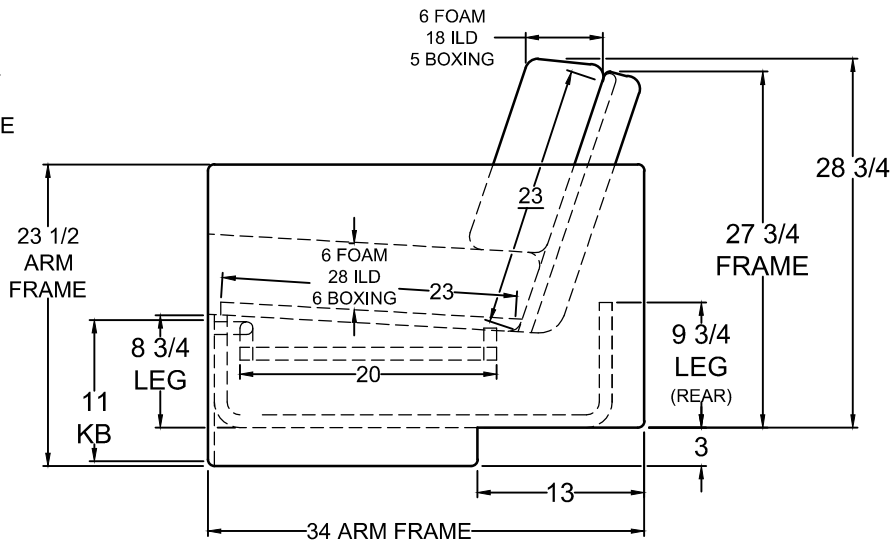

VILLA INTERNATIONAL
13760 Midway St.
Cerritos, CA 90703
Tel 562-404-8111
Fax 562-404-7781

TITLE	DWG. NO.	REV.	APV	SCALE 1:1
2024 LADP CSA - 74" TRI-FOLD SLEEPER TV VERSION	VI2001248	-	RL	DO NOT SCALE DRAWING.
	DR J.ANCHETA	DATE 11.17.22	12.02.22	UNLESS OTHERWISE SPECIFIED DIMENSIONS ARE IN INCHES.

THIS DRAWING IS THE PROPERTY OF VILLA INTERNATIONAL MFG. ALL RIGHTS RESERVED.

-	-	
-	-	

REVISIONS