| ITEM # | QTY | NEWMAR # | DESCRIPTION |
|---|---|---|---|
| 1 | 1 | 164697 | SHOWER CONTROL MOUNT 24LA |

# 14 GA. ALUMINUM SHOWER VALVE BRACKET

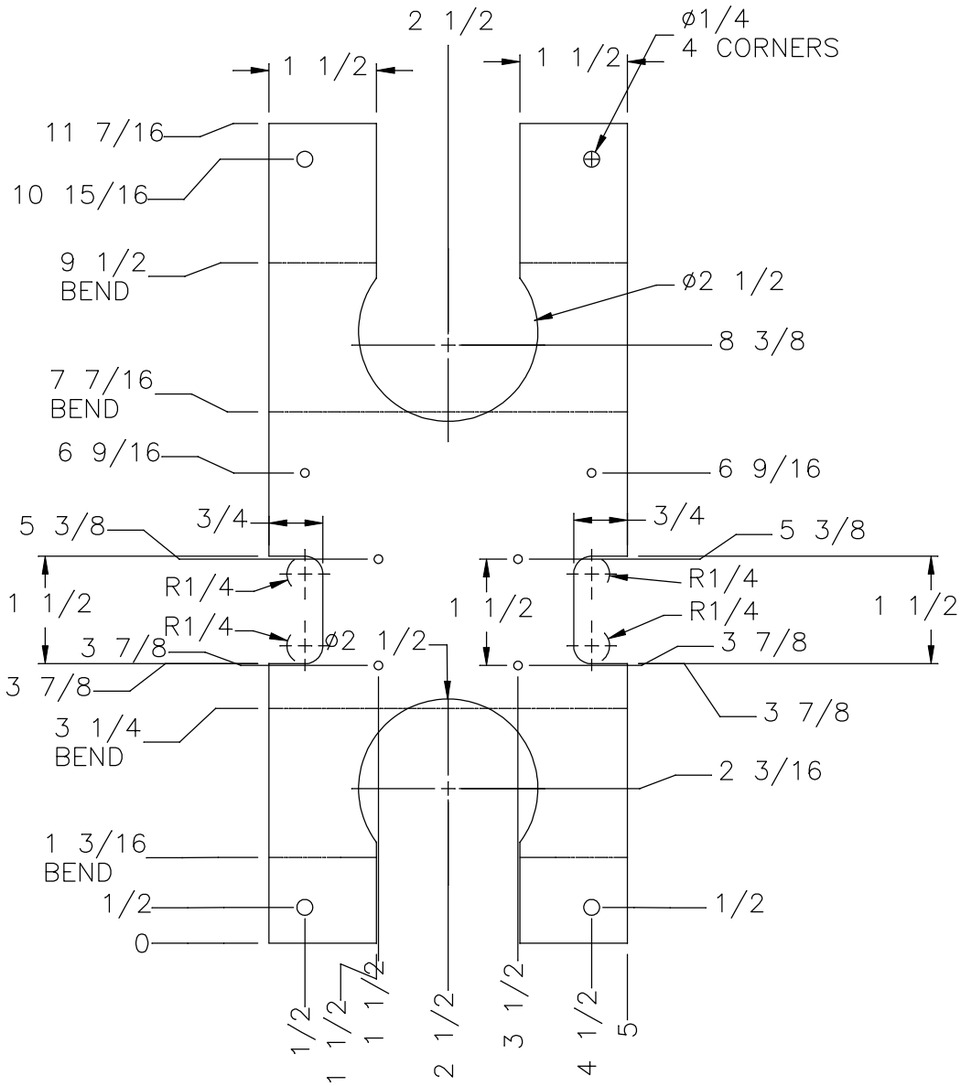


## FLATTENED VIEW

NOTE: ALL HOLES NOT DIMENTIONED ARE ø1/8".

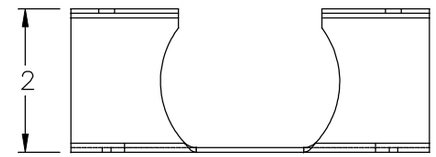


## TOP VIEW

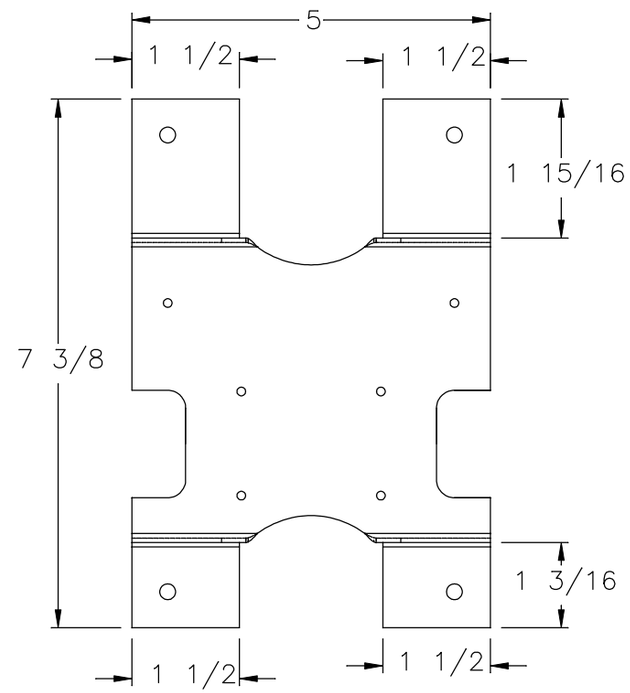


## FRONT VIEW

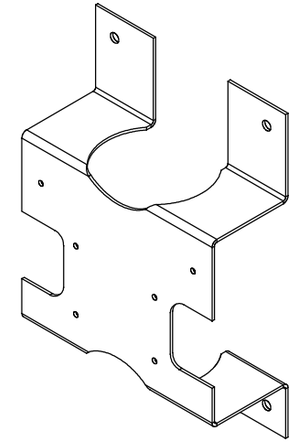

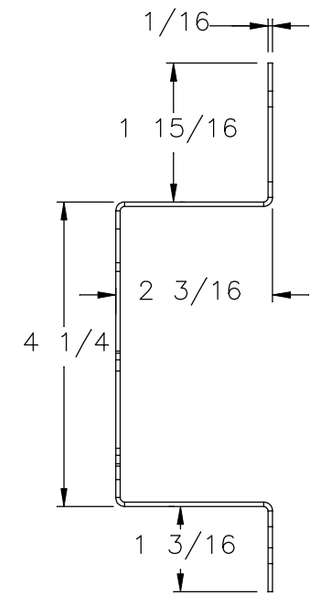


## SIDE VIEW

| | | | | | | |
|---|---|---|---|---|---|---|
| NEWMAR CORP<br>P.O. Box 30,<br>Nappanee, IN. 46550 | Model:<br>LADP | Sheet<br>1 OF 1 | Drawn by:<br>S. H. | Checked by:<br>B. B. | Revision: COMPLETE REDESIGN OF BRACKET (PCR #240270) | By: N. L.<br>Date: BB 12/7/22 |
| UNITS: INCHES<br>TITLE BLOCK: 1-2FULTB | Title:<br>SHOWER BRACKET | I.D. # 2024\HE\CAB\BA\MISC8003 | Date:<br>7/29/22 | Date:<br>9/7/22 | Revision: MOVED 4 HOLES ON SHOWER BRACKET TO ALIGN WITH SHOWER SYSTEM (PCR #240214) | By: B. R. M.<br>Date: BB 11/14/22 |