| | |
|---|---|
| CUT PATTERN | |
| BACK FRAME NO. | |
| BASE FRAME NO. | |
| WOOD PATTERN | |
| | |

= MAIN
= ACCENT

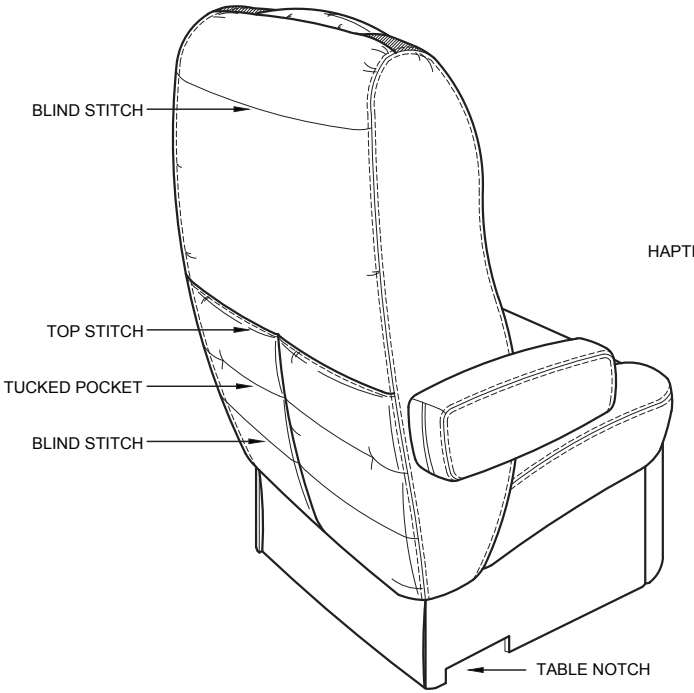


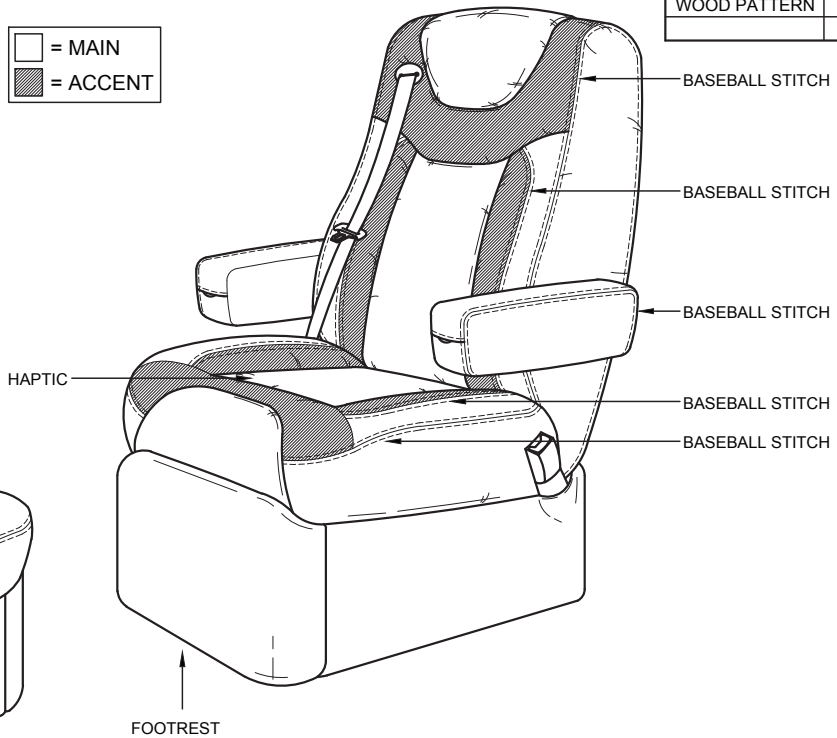


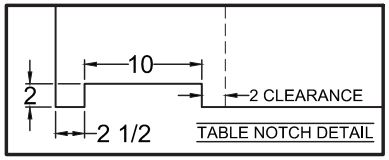


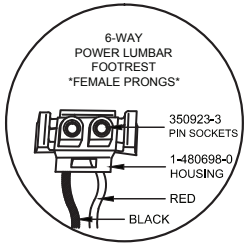


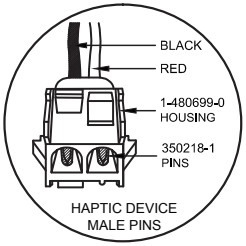


VILLA INTERNATIONAL
13760 Midway St.
Cerritos, CA 90703
Tel 562-404-8111
Fax 562-404-7781

| TITLE | DWG. NO. | REV. | APV | SCALE 1:1 |
|---|---|---|---|---|
| 2023 DSDP<br>ISS CO-PILOT SEAT | VI6001004 | - | -- | DO NOT SCALE DRAWING. |
| | DR J.ANCHETA | DATE 11.18.21 | -- | UNLESS OTHERWISE SPECIFIED DIMENSIONS ARE IN INCHES. |

THIS DRAWING IS THE PROPERTY OF VILLA INTERNATIONAL MFG. ALL RIGHTS RESERVED.

| | | |
|---|---|---|
| -- | - | |
| -- | - | |

REVISIONS