ITEM #	QTY	NEWMAR #	DESCRIPTION
1	1	166298	BRKT CAB ELECTRIC HOOKUP

NOTE: 7GA STEEL; PAINTED BLACK

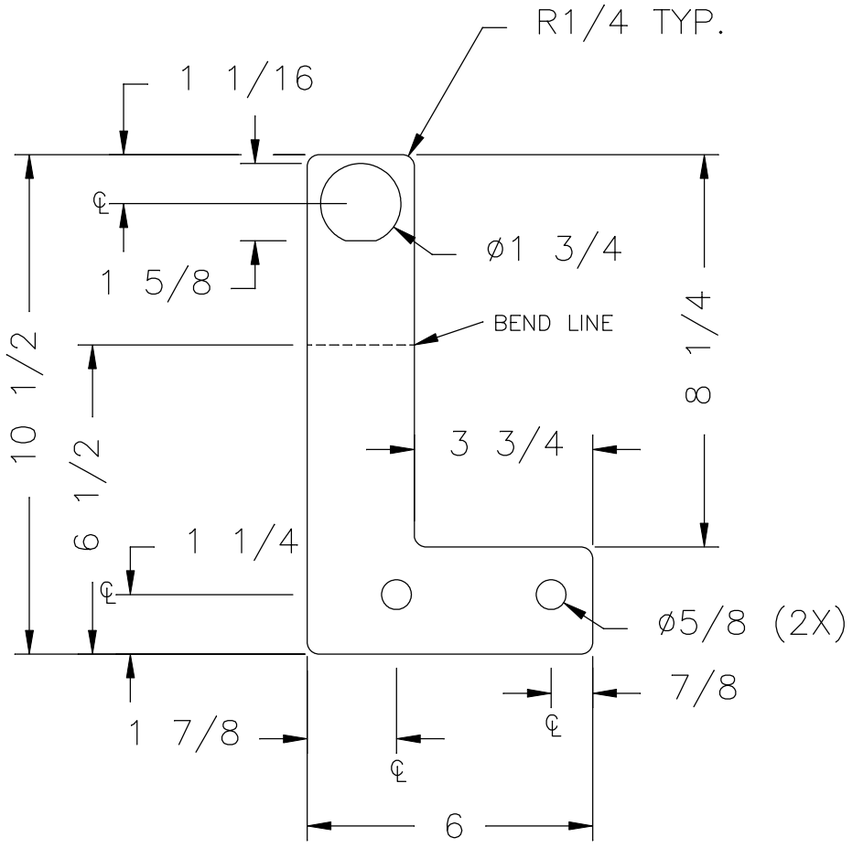

FLAT PATTERN

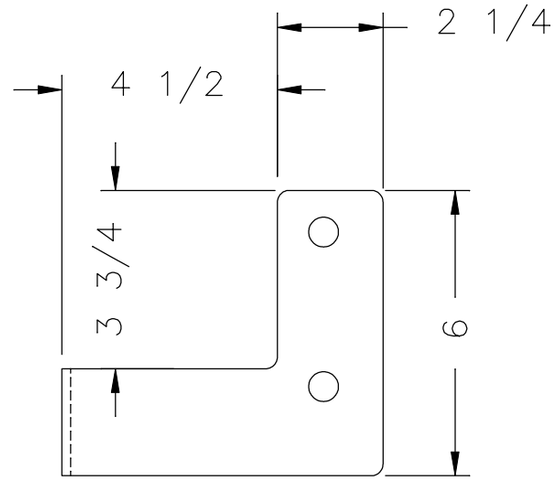

TOP VIEW

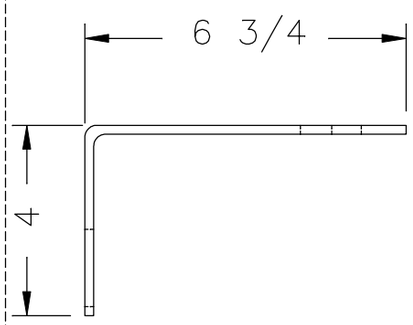

SIDE VIEW

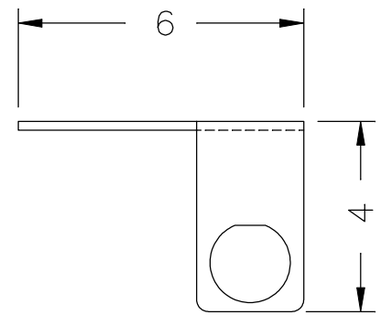

FRONT VIEW

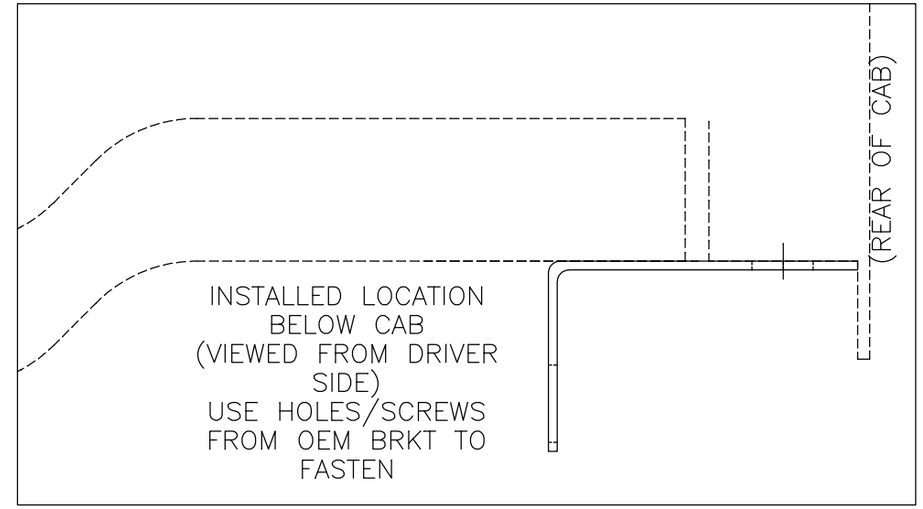

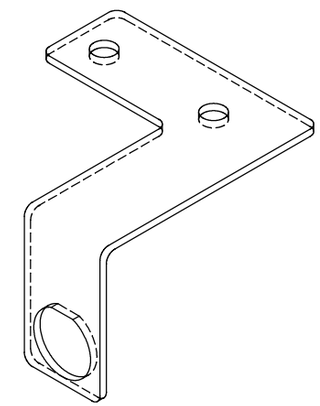

ISO VIEW

NEWMAR CORP P.O. Box 30, Nappanee, IN. 46550	Model: SSCC/SACC (SEE INDEX)	Sheet 1 OF 1	Drawn by: R. W.	Checked by: E. C.	Revision: New 2024 print; Created bracket 166298 for the electrical hook up under the cab due to the provided bracket offering little clearance for the cab lift cylinder and to provide a standard bracket and setup for both Super C's (2024 ECO #50)	By: R. W. Date:EC 2/22/23
UNITS: INCHES	Title: CAB ELECTRIC MOUNTING BRACKET	I.D. # 2024\CC\FRAME\PARTS CAB_ELEC_MNT_BRKT	Date: 2/22/23	Date: 2/22/23	Revision:	By:
TITLE BLOCK: 1-4FULTB						Date: