CUT PATTERN	
BACK FRAME NO.	
BASE FRAME NO.	
WOOD PATTERN	

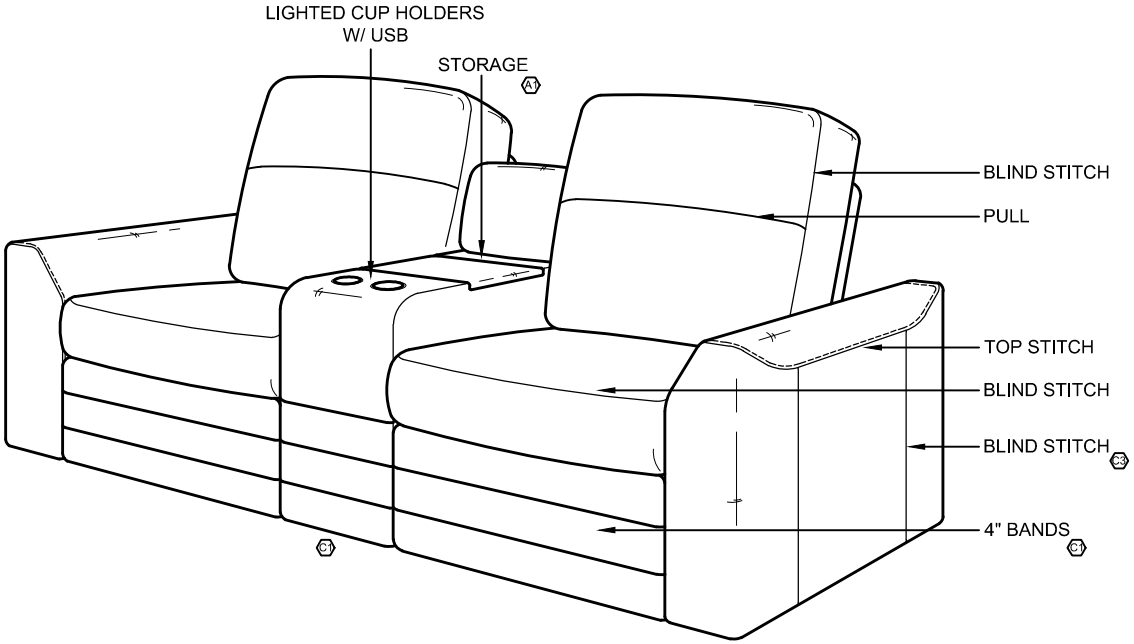

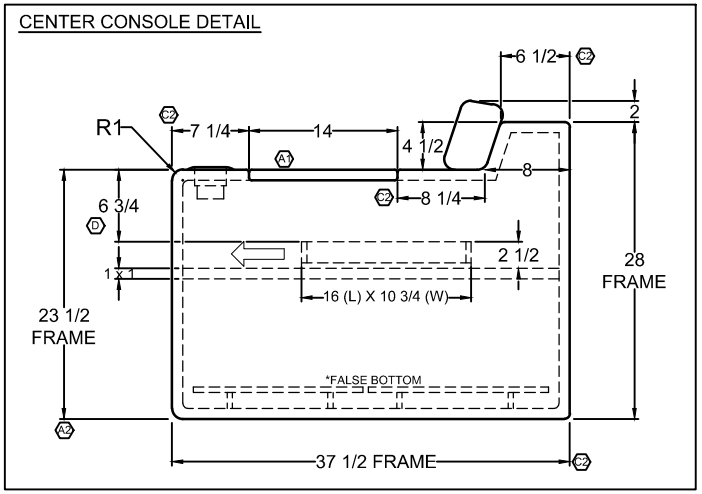

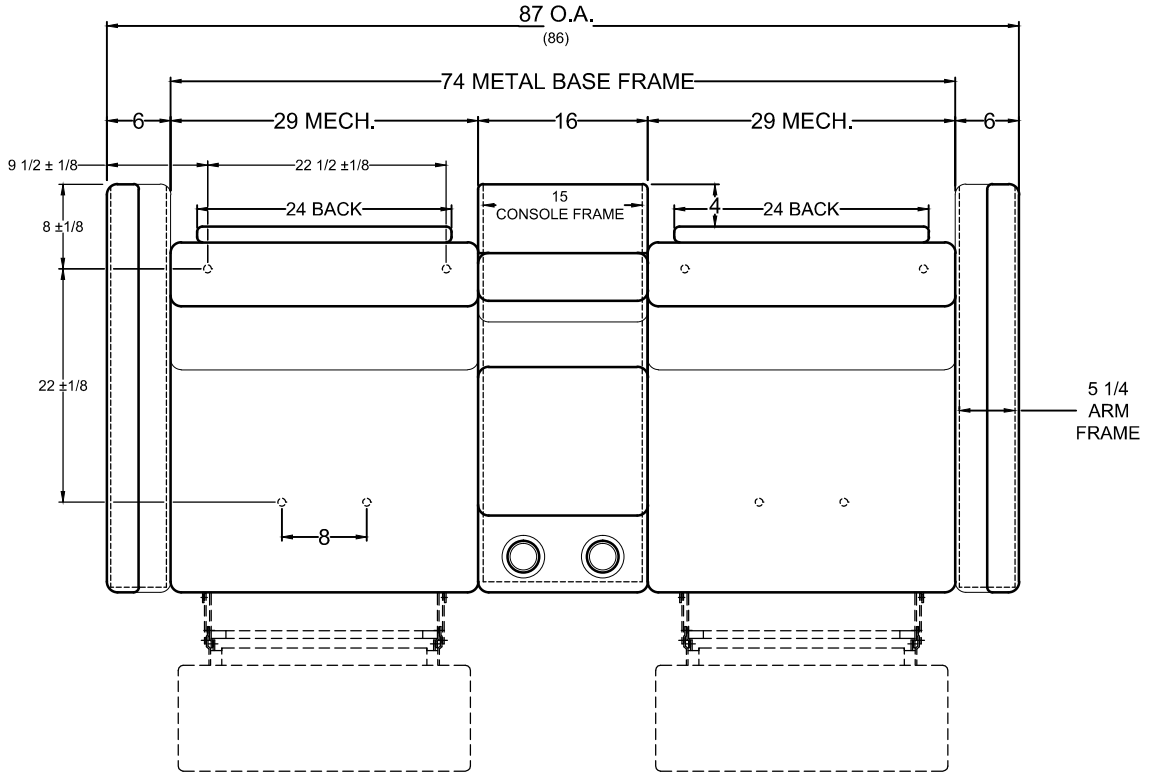

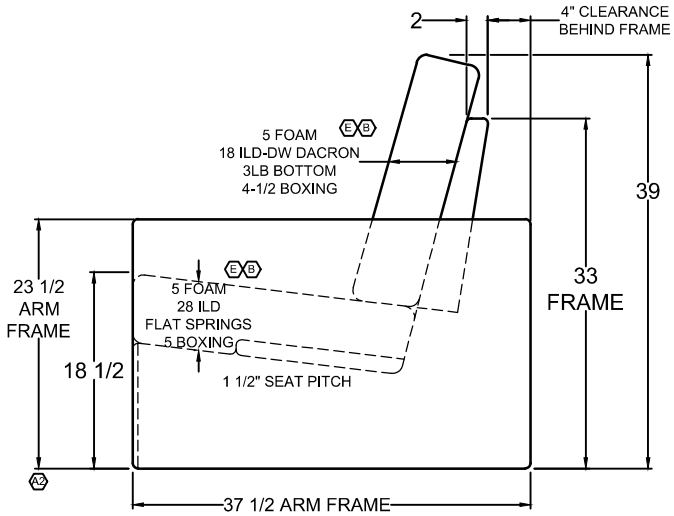

JA	E	PER LP, ADD 4-1/2" BOXING TO BACK PILLOW AND 5" BOXING TO SEAT CUSHION.	05.29.24
JA	D	PER RL, CORRECT CONSOLE SHELF HEIGHT TO 6-3/4"; WAS 4-3/4".	02.21.24
JA	C	[1] PER RL, CHANGE KICKBOARD BANDS TO 3 BANDS AT 4"; WAS 4 BANDS AT 3". ALSO INCLUDE BANDS ON CONSOLE. [2] ADD ADDITIONAL CONSOLE WOOD DIMENSIONS. [3] PER LP, ADD BLIND STITCHES TO SIDE OF ARMS.	10.24.23
JA	B	PRODUCTION UPDATE: REVISE FOAM DETAILS FOR SEAT AND BACK CUSHIONS.	07.20.23
JA	A	PRODUCTION UPDATE: [1] CHANGE CONSOLE TO HAVE FLUSH LID STORAGE TOP. [2] CHANGE CONSOLE & ARM FRAME HEIGHTS TO 23-1/2"; WAS 21-1/2".	06.21.23

REVISIONS

VILLA INTERNATIONAL
13760 Midway St.
Cerritos, CA 90703
Tel 562-404-8111
Fax 562-404-7781

TITLE: 2025 MOUNTAIN AIRE
87" HOME THEATER

DWG. NO. VI7000657 | REV. E

DR J.ANCHETA | DATE 06.08.23

APV FTBM 06.08.23

SCALE 1:1
DO NOT SCALE DRAWING.
UNLESS OTHERWISE SPECIFIED DIMENSIONS ARE IN INCHES.

THIS DRAWING IS THE PROPERTY OF VILLA INTERNATIONAL MFG. ALL RIGHTS RESERVED.