CUT PATTERN	
BACK FRAME NO.	
BASE FRAME NO.	
WOOD PATTERN	

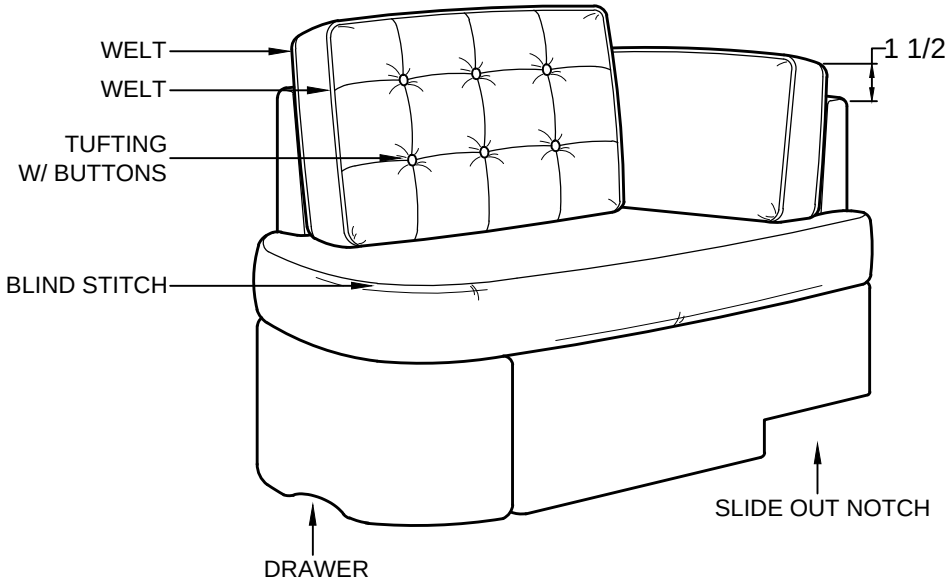

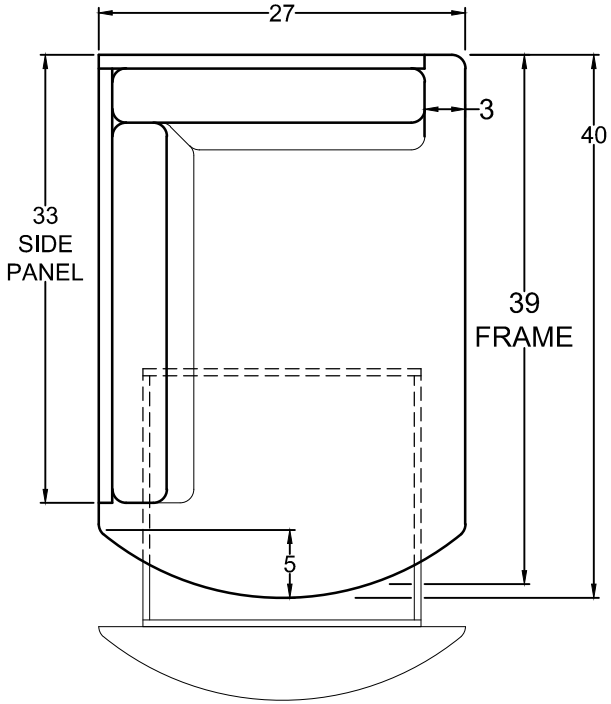

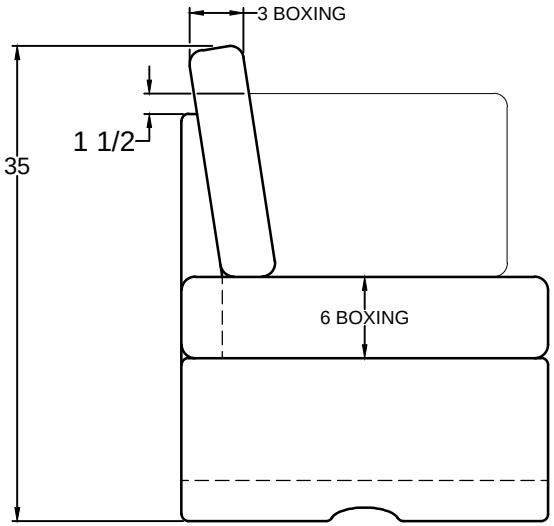

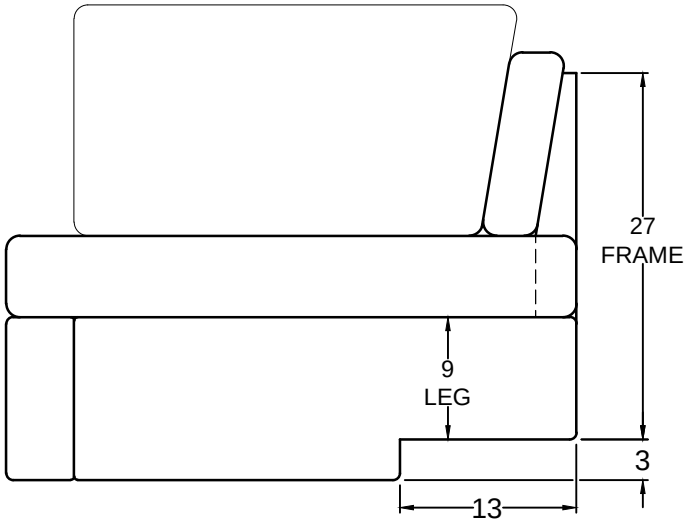

VILLA INTERNATIONAL
13760 Midway St.
Cerritos, CA 90703
Tel 562-404-8111
Fax 562-404-7781

TITLE	DWG. NO.	REV.	APV
2023 ESSEX 42" x 27" LAF DINETTE BENCH	VI3000821	-	--
	DR J.ANCHETA	DATE 11.17.21	--

SCALE 1:1
DO NOT SCALE DRAWING.
UNLESS OTHERWISE SPECIFIED DIMENSIONS ARE IN INCHES.

--	-	
--	-	

REVISIONS

THIS DRAWING IS THE PROPERTY OF VILLA INTERNATIONAL MFG. ALL RIGHTS RESERVED.