CUT PATTERN	
BACK FRAME NO.	
BASE FRAME NO.	
WOOD PATTERN	

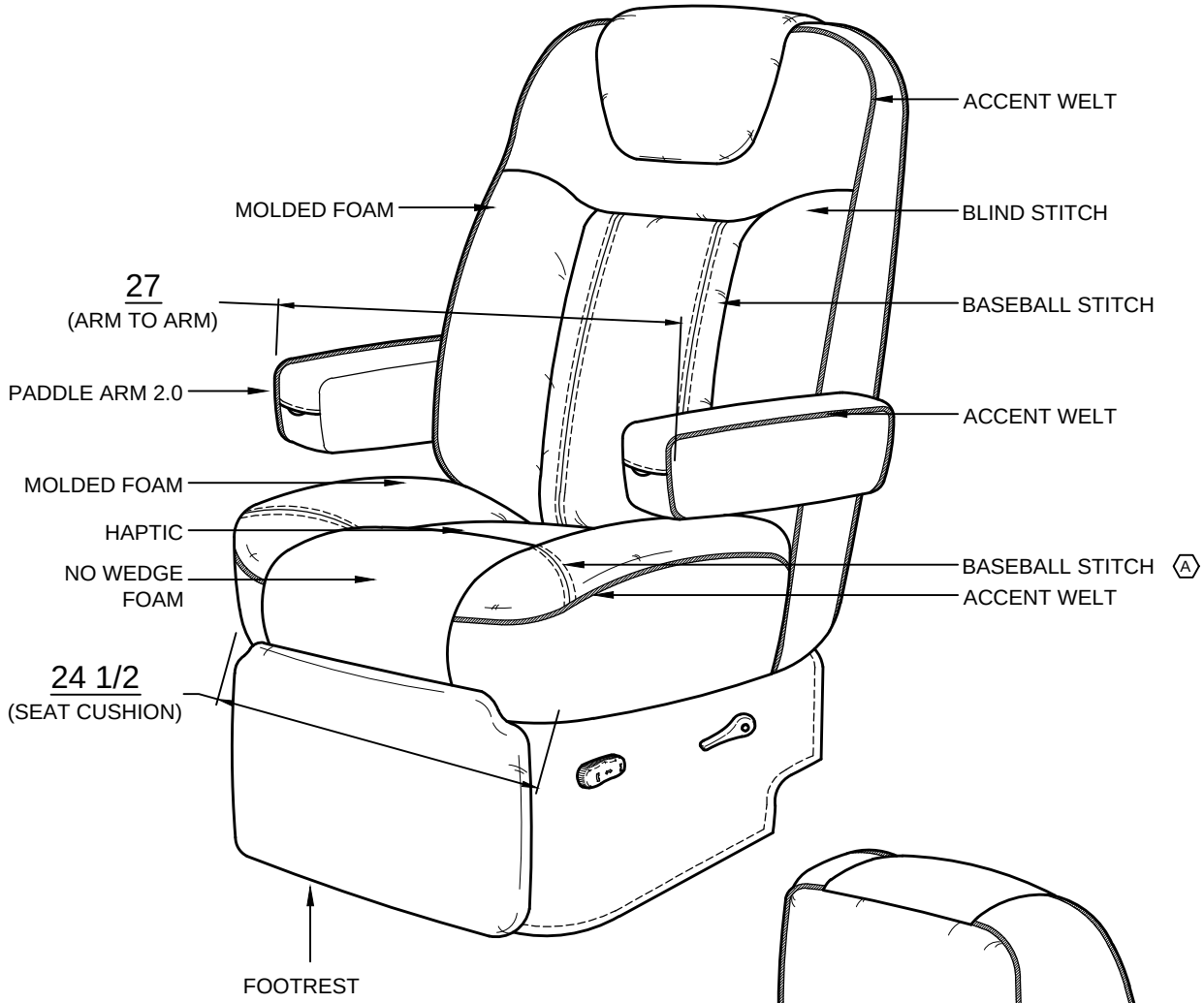

AISLE SIDE CONTROLS:
- GSK 6-WAY
- MANUAL RECLINE

WALL SIDE CONTROLS:
- SWIVEL CABLE
- MANUAL FOOTREST

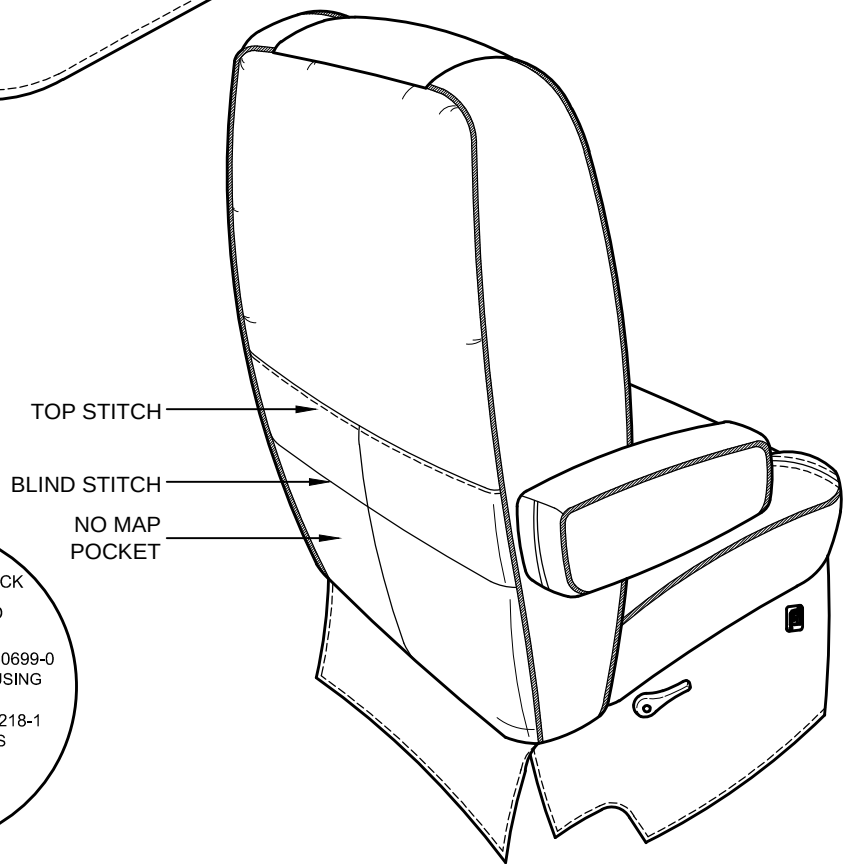

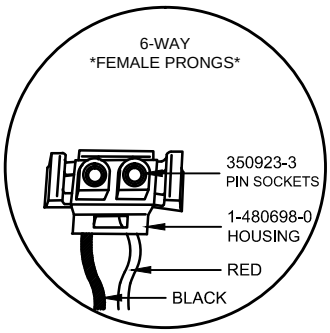

B

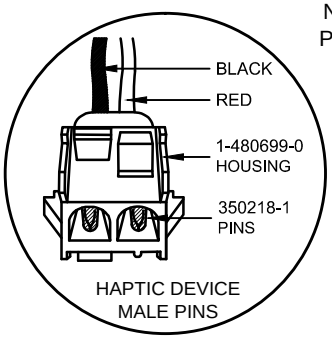

COMFORTFIT
BY VILLA INTERNATIONAL
13760 Midway St.
Cerritos, CA 90703
Tel 562-404-8111
Fax 562-404-7781

TITLE: 2025 KSDP - JACKSON
CO-PILOT SEAT

DWG. NO. CF6001163 | REV. B
DR J.ANCHETA | DATE 05.19.23
APV FTBM 05.22.23
SCALE 1:1
DO NOT SCALE DRAWING.
UNLESS OTHERWISE SPECIFIED DIMENSIONS ARE IN INCHES.

THIS DRAWING IS THE PROPERTY OF VILLA INTERNATIONAL MFG. ALL RIGHTS RESERVED.

JA	B	PER RL, ADD WIRING CONNECTORS TO DRAWING.	02.02.24
JA	A	CHANGE TOP STITCHES ON FRONT OF SEAT TO BASEBALL STITCH. (REF. ECO #031-2023)	06.21.23

REVISIONS