CUT PATTERN	
BACK FRAME NO.	
BASE FRAME NO.	
WOOD PATTERN	

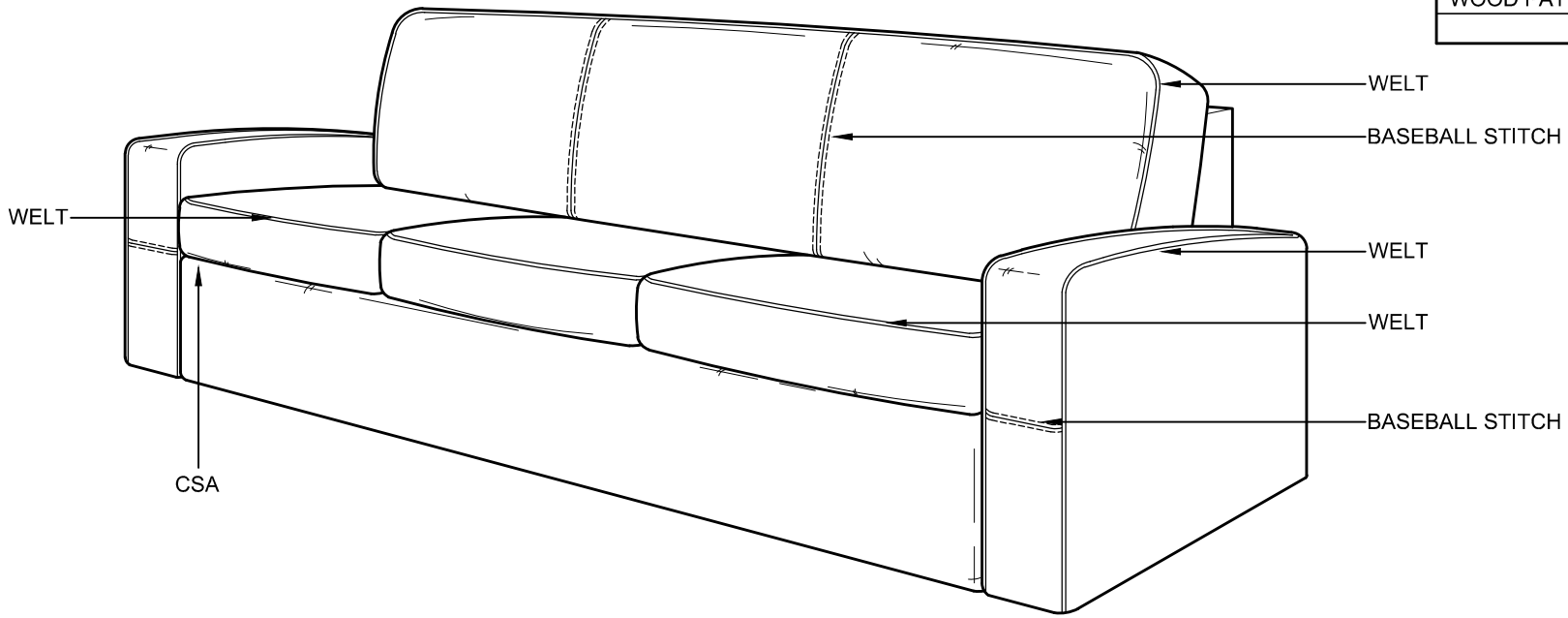

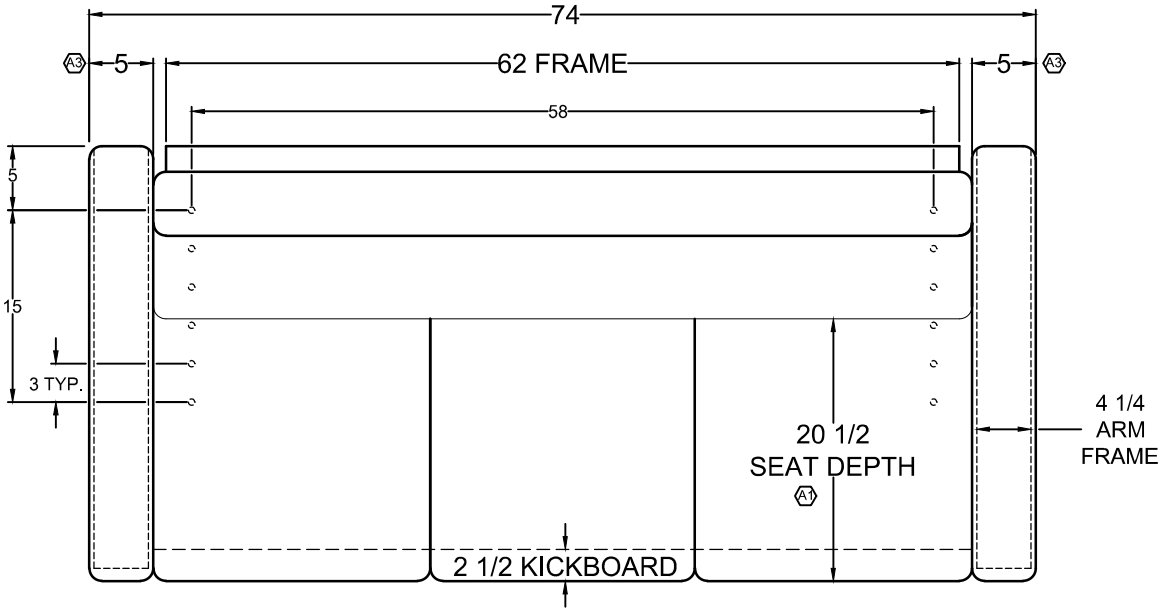

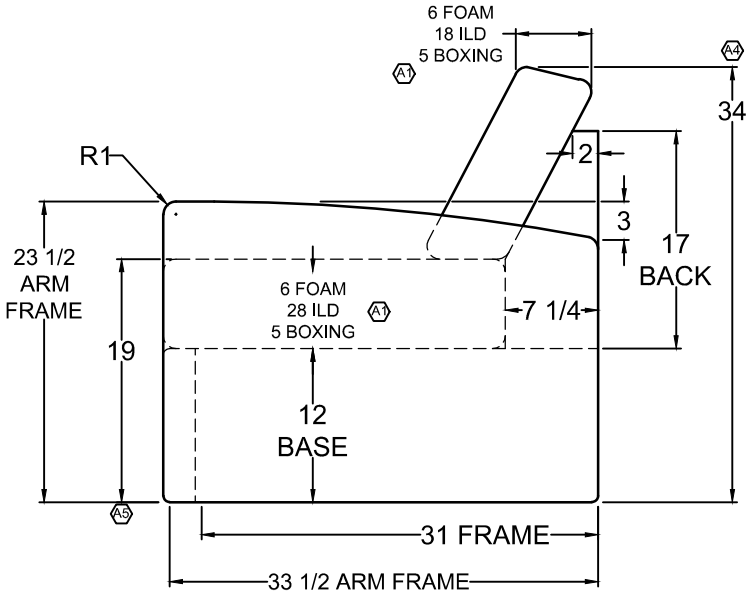

***NOTE** : BED DIMENSIONS 52"(w) x 72"(d)

COMFORTFIT
BY VILLA INTERNATIONAL

13760 MIDWAY STREET
CERRITOS CA 90703
(562) 404-8111
FAX (562) 404-7781

TITLE	DWG. NO.	REV.	APV	SCALE 1:1
2025 KSDP 74" CSA SOFA BED	CF1001056	A	FTBM 02.02.23	DO NOT SCALE DRAWING. UNLESS OTHERWISE SPECIFIED DIMENSIONS ARE IN INCHES.
	DR J.ANCHETA	DATE 01.13.23		

THIS DRAWING IS THE PROPERTY OF VILLA INTERNATIONAL MFG. ALL RIGHTS RESERVED.

--	-		
JA	A	[1] CHANGE SEAT AND BACK FOAM DETAILS TO 6 FOAM & 5 BOXING. [2] ADD 20-1/2" SEAT DEPTH DIMENSION TO DRAWING. [3] CHANGE ARM WIDTH TO 5"; WAS 6". [4] REMOVE 3-1/4" HEIGHT DIM AND REPLACE WITH 34" O.A. HEIGHT DIM. [5] CHANGE SEAT HEIGHT TO 19"; WAS 18". (REF. ECO# 008-2023)	03.17.23

REVISIONS