CUT PATTERN	
BACK FRAME NO.	
BASE FRAME NO.	
WOOD PATTERN	

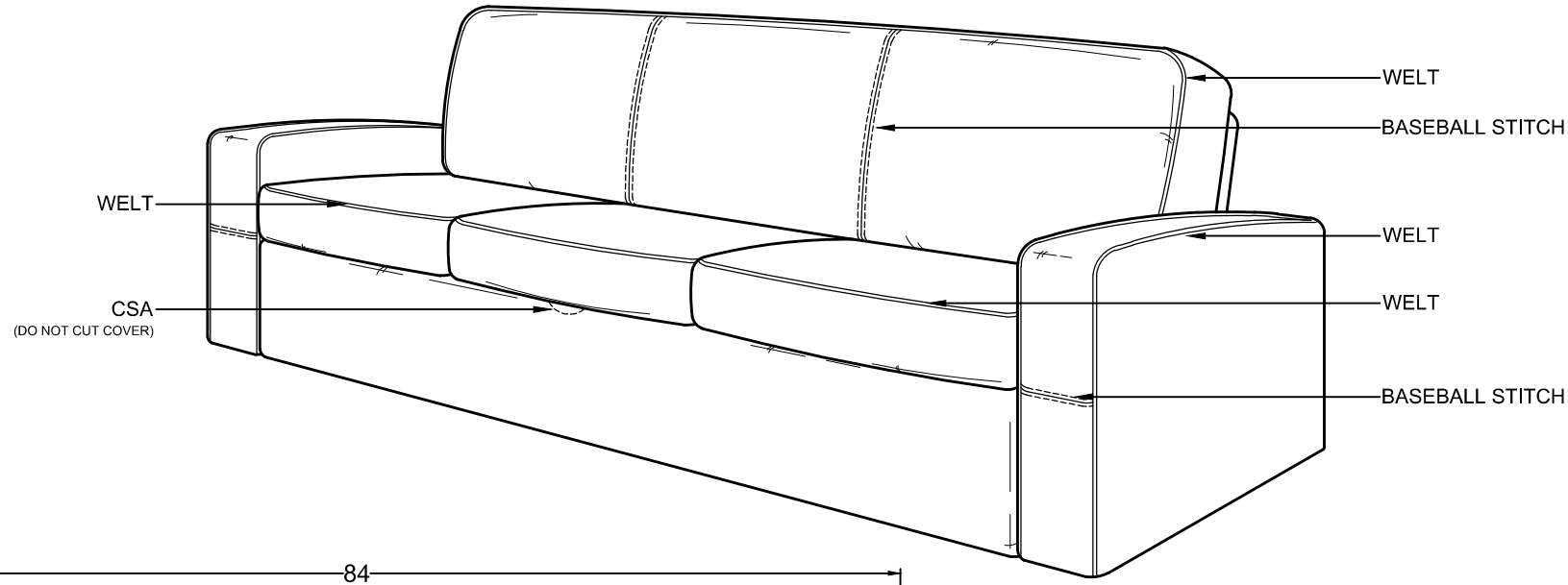

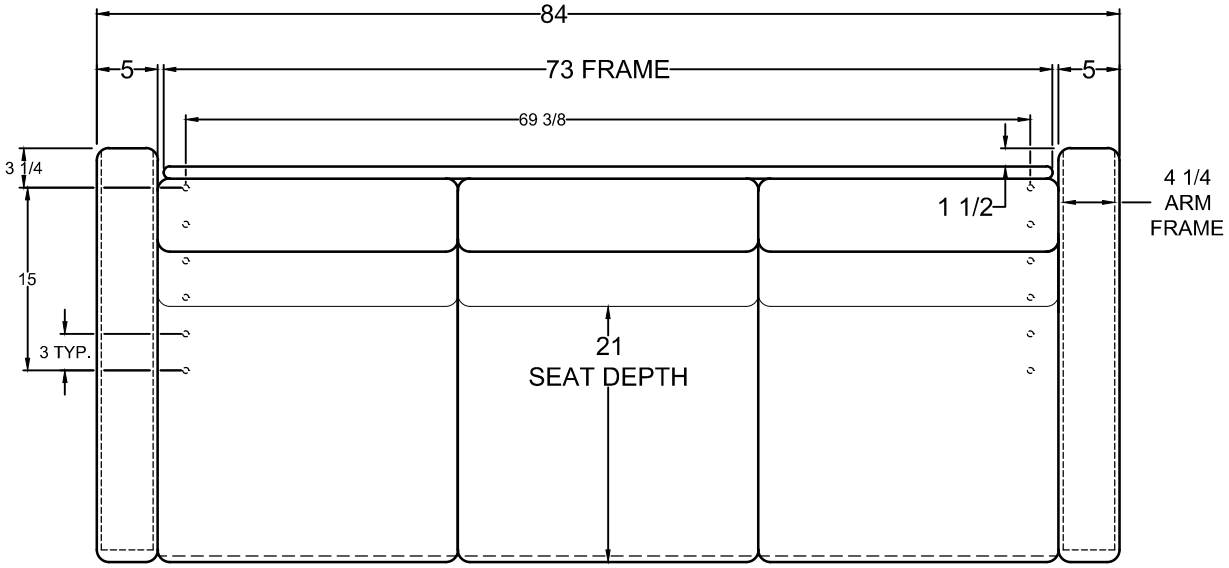

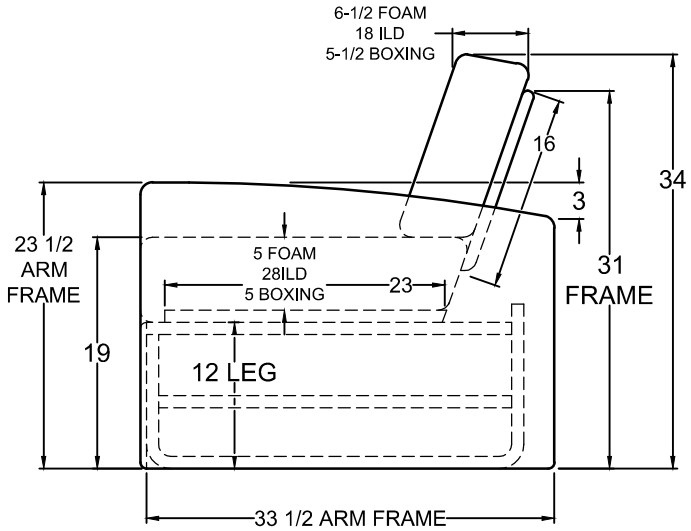

***NOTE** : BED DIMENSIONS: 72"(w) x 42"(d)

COMFORTFIT
BY VILLA INTERNATIONAL
13760 MIDWAY STREET
CERRITOS CA 90703
(562) 404-8111
FAX (562) 404-7781

TITLE	DWG. NO.	REV.	APV
2025 NSDP - JACKSON 84" CSA JACK KNIFE SOFA	CF2001368	-	--
	DR J.ANCHETA	DATE 10.31.23	--

SCALE 1:1
DO NOT SCALE DRAWING.
UNLESS OTHERWISE SPECIFIED DIMENSIONS ARE IN INCHES.

THIS DRAWING IS THE PROPERTY OF VILLA INTERNATIONAL MFG. ALL RIGHTS RESERVED.

REVISIONS