CUT PATTERN	
BACK FRAME NO.	
BASE FRAME NO.	
WOOD PATTERN	

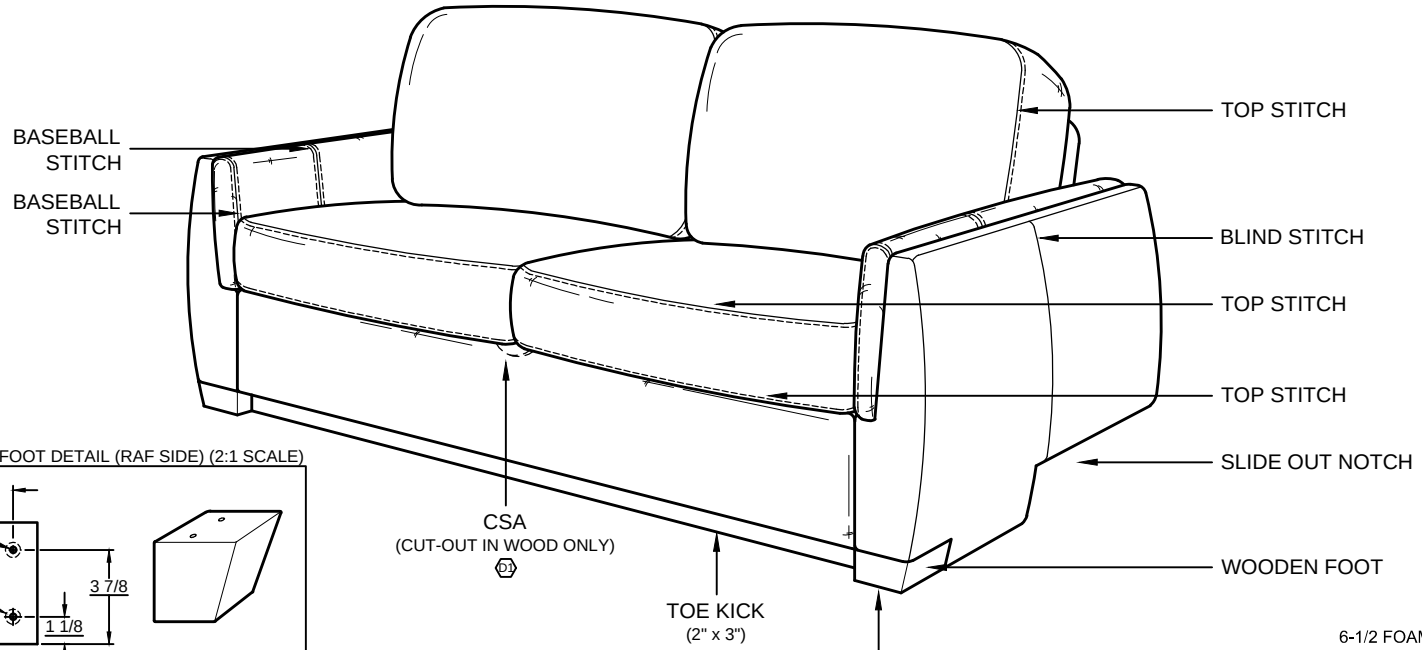

***WOODEN FOOT WILL BE INSTALLED BY CUSTOMER**

F2

*FRONT OF RAF ARM FRAME DETAIL

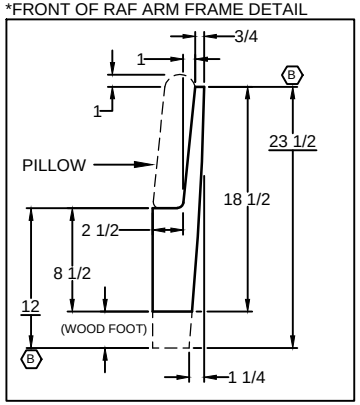

*WOODEN FOOT DETAIL (RAF SIDE) (2:1 SCALE)

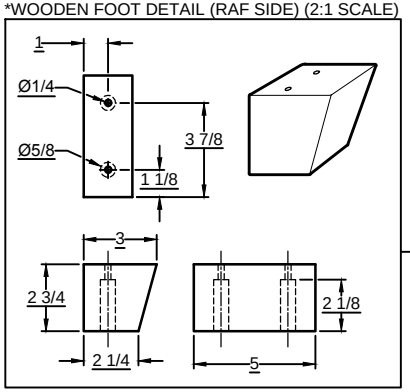

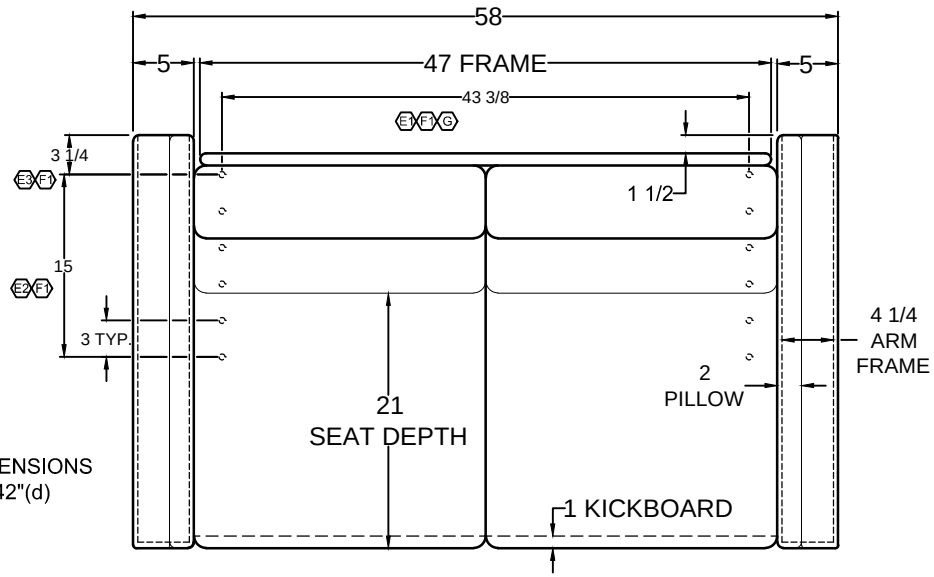

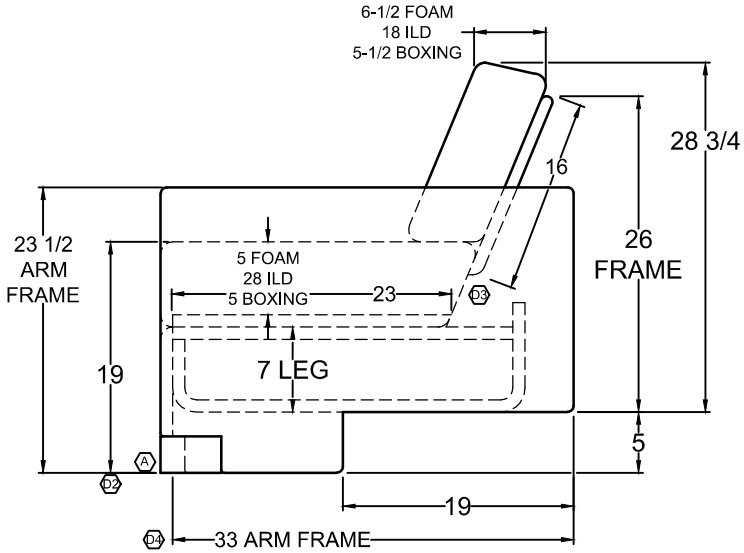

***NOTE :**
BED DIMENSIONS
46"(w) x 42"(d)

JA	G	PER RL, CHANGE BOLT PATTERN WIDTH TO 43-3/8"; WAS 42-1/2".	08.18.23
JA	F	PER RL, [1] REVISE BOLT PATTERN. [2] ADD NOTE THAT CUSTOMER WILL INSTALL WOODEN FOOT.	11.30.22
JA	E	PER MB, [1] CHANGE BOLT PATTERN WIDTH TO 42-5/8"; WAS 41-3/8". [2] CHANGE BOLT PATTERN DEPTH TO 14"; WAS 15". [3] ADD NOTE THAT THE BOLT IS ALSO 2" FROM THE BACK BEND OF THE LEG.	08.23.22
JA	D	[1] ADDED CSA TO SOFA. [2] CHANGE SEAT HEIGHT TO 19"; WAS 18-1/2". [3] ADDED 16" BACK & 23" SEAT FRAME DIMS TO DRAWING. (REF. ORD. #0170204). [4] PER FTBM, CHANGE ARM FRAME DEPTH TO 33"; WAS 34".	06.08.22
JA	C	DRAFTING CORRECTION: REVISED KICKBOARD TO BE LESS CONTOURED ON ISO DRAWING.	02.18.22
JA	B	PER RL, ADD 12" & 23-1/2" HEIGHT DIMENSIONS TO FRONT OF ARM FRAME DETAIL.	02.16.22
JA	A	DRAFTING CORRECTION: ADDED WOODEN FOOT TO SIDE VIEW.	02.08.22

REVISIONS

COMFORTFIT
BY VILLA INTERNATIONAL
13760 MIDWAY STREET
CERRITOS CA 90703
(562) 404-8111
FAX (562) 404-7781

TITLE: 2023 DSDP
CSA - 58" JACK KNIFE SOFA

DWG. NO. CF2001169 | REV. G

DR J.ANCHETA | DATE 11.22.21

APV FTBM 06.13.22

SCALE 1:1
DO NOT SCALE DRAWING.
UNLESS OTHERWISE SPECIFIED DIMENSIONS ARE IN INCHES.

THIS DRAWING IS THE PROPERTY OF VILLA INTERNATIONAL MFG. ALL RIGHTS RESERVED.