CUT PATTERN	
BACK FRAME NO.	
BASE FRAME NO.	
WOOD PATTERN	

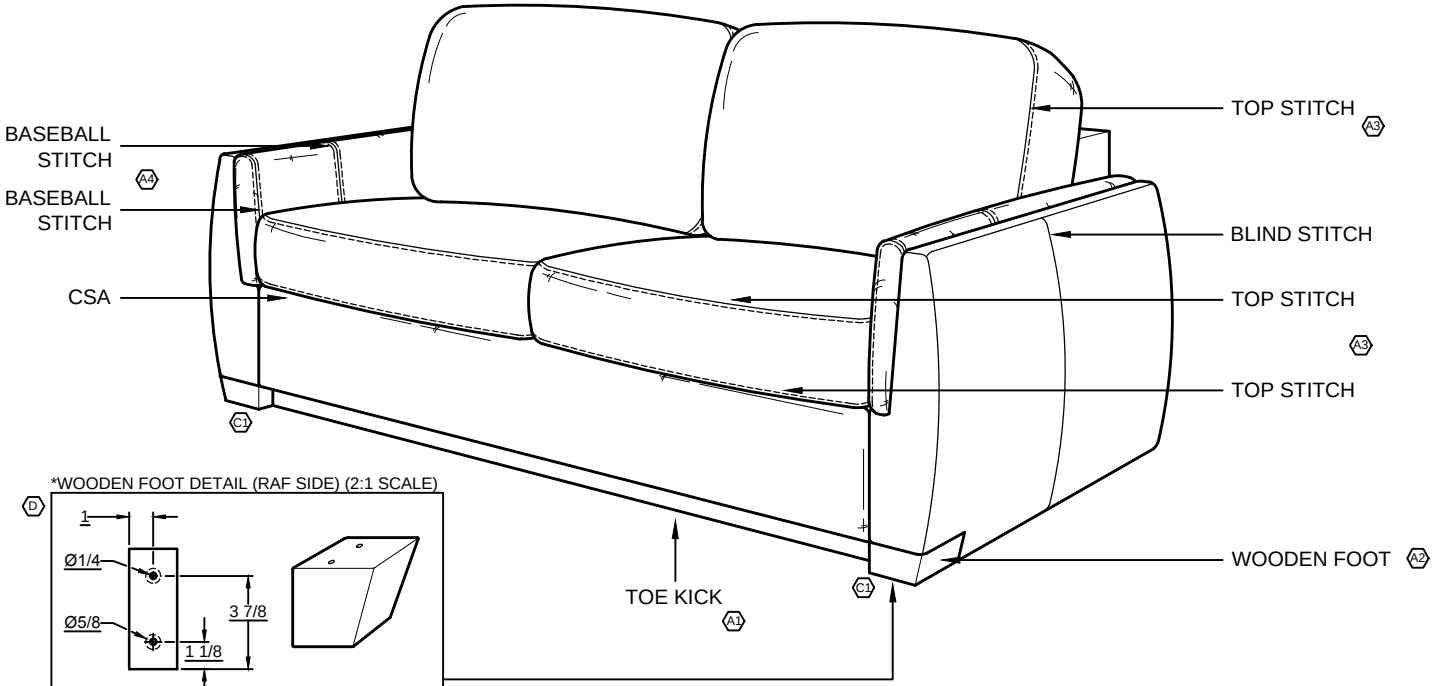

*WOODEN FOOT DETAIL (RAF SIDE) (2:1 SCALE)

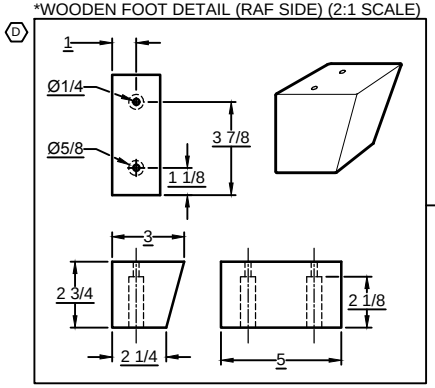

*FRONT OF RAF ARM FRAME DETAIL

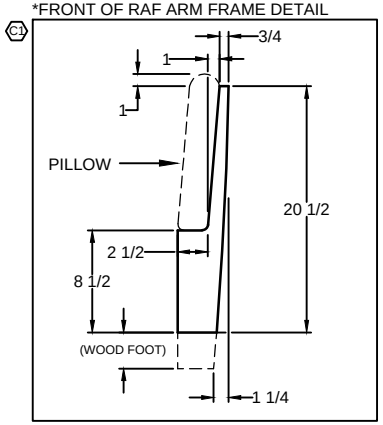

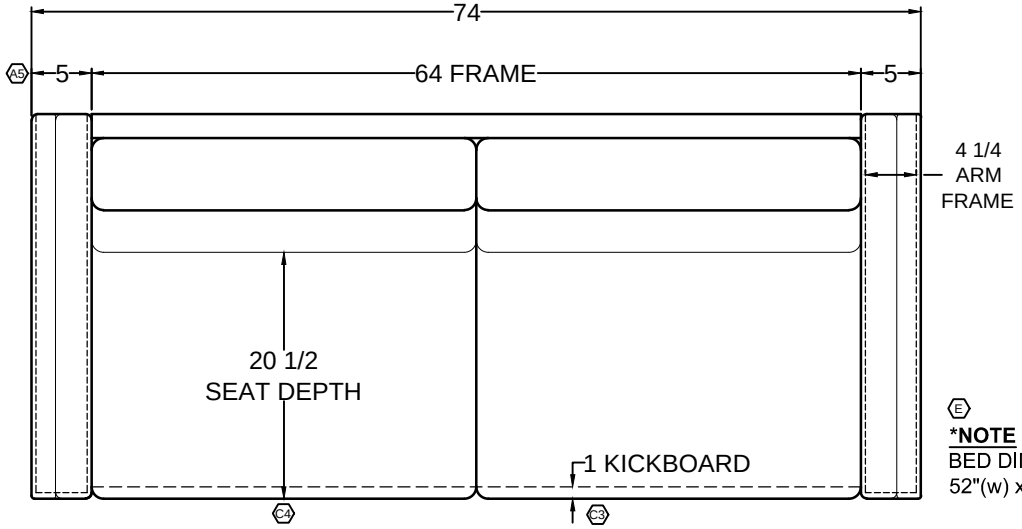

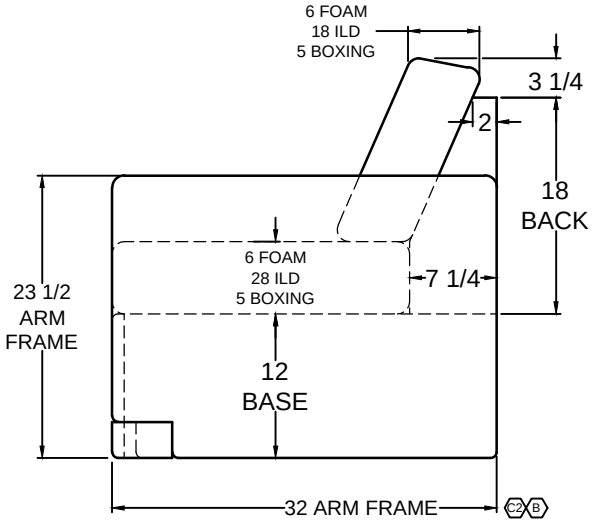

E

***NOTE** :
BED DIMENSIONS
52"(w) x 72"(d)

JA	F	DRAFTING CORRECTION: REVISED KICKBOARD TO BE LESS CONTOURED ON ISO DRAWING.	02.21.22
JA	E	PER RL, ADD BED DIMENSIONS TO DRAWING.	11.19.21
JA	D	PER RL, ADD WOODEN FOOT DETAIL & DIMENSIONS.	07.13.21
JA	C	PER RL, [1] CHANGE ARM STYLE & ADD ARM FRAME DETAIL TO DRAWING. [2] CHANGE ARM FRAME DEPTH TO 32"; WAS 33-1/2", [3] CHANGE KICKBOARD DEPTH TO 1"; WAS 2-1/2". [4] ADD 20-1/2" SEAT DEPTH DIM TO DRAWING.	04.22.21
JA	B	PRODUCTION UPDATE: CHANGE ARM FRAME DEPTH TO 33-1/2"; WAS 28"	03.26.21
JA	A	PER RL, [1] ADD TOE KICK. [2] ADD WOOD FOOT UNDER ARMS. [3] CHANGE WELTS TO TOP STITCH ON SEAT AND BACK CUSHIONS. [4] ADD BASEBALL STITCH TO ARM PILLOWS. [5] CHANGE ARM WIDTH TO 5"; WAS 3".	02.16.21

REVISIONS

COMFORTFIT
BY VILLA INTERNATIONAL
13760 MIDWAY STREET
CERRITOS CA 90703
(562) 404-8111
FAX (562) 404-7781

TITLE: 2023 DSDP
CSA - 74" SOFA BED

DWG. NO. CF1000918 | REV. F

DR J.ANCHETA | DATE 01.26.21

APV FTBM 02.05.21

SCALE 1:1
DO NOT SCALE DRAWING.
UNLESS OTHERWISE SPECIFIED DIMENSIONS ARE IN INCHES.

THIS DRAWING IS THE PROPERTY OF VILLA INTERNATIONAL MFG. ALL RIGHTS RESERVED.