CUT PATTERN	
BACK FRAME NO.	
BASE FRAME NO.	
WOOD PATTERN	

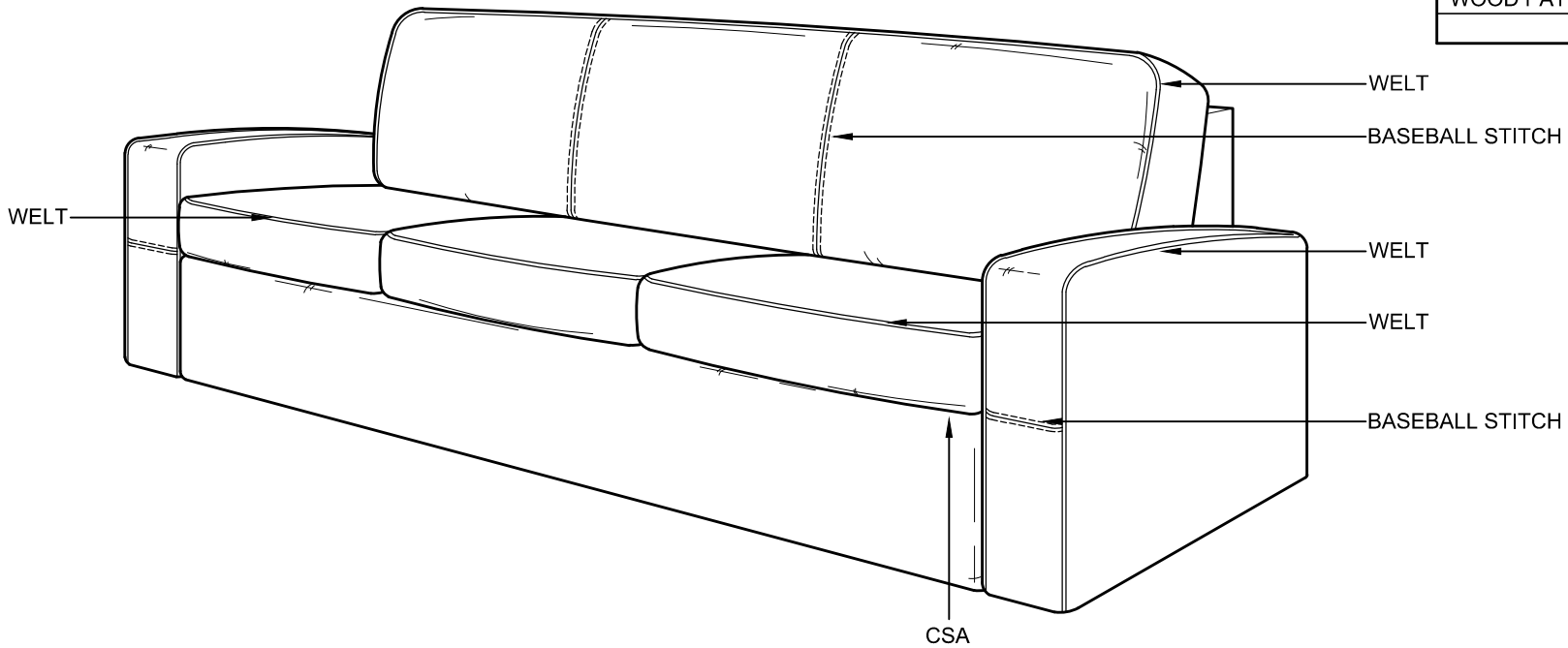

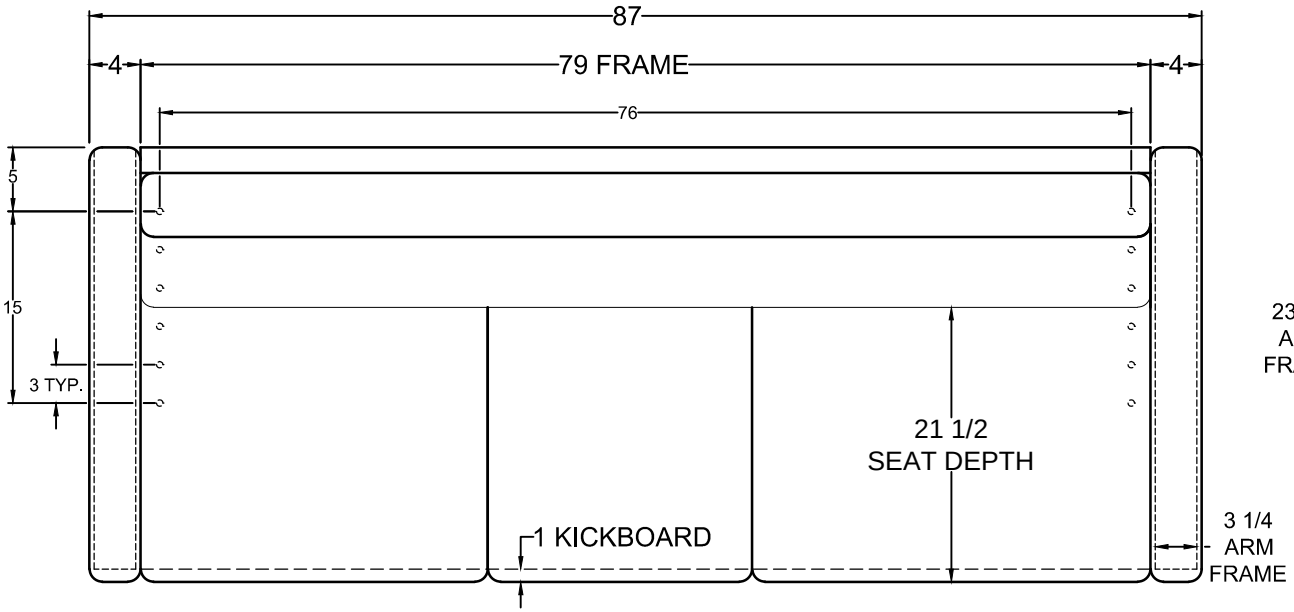

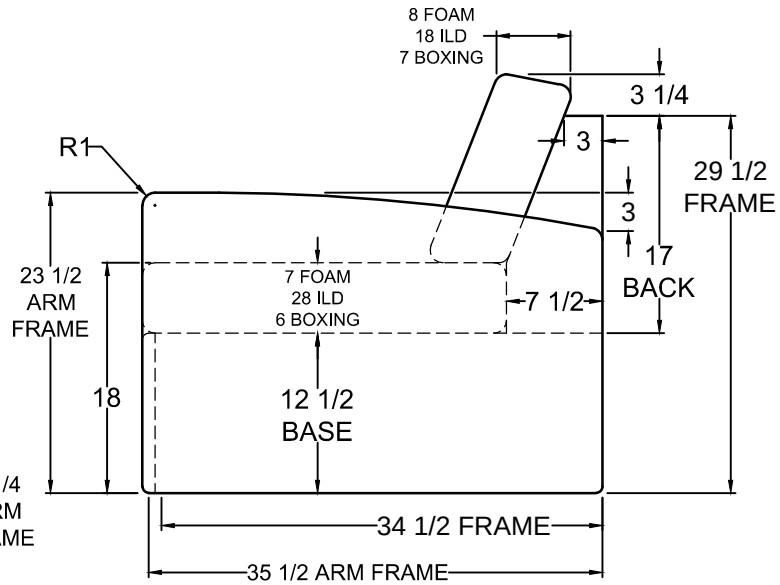

***NOTE :** BED DIMENSIONS: 72"(w) x 62"(d)

COMFORTFIT
BY VILLA INTERNATIONAL
13760 MIDWAY STREET
CERRITOS CA 90703
(562) 404-8111
FAX (562) 404-7781

TITLE: 2025 NSDP - JACKSON
87" CSA SIDEWAYS SOFA BED

DWG. NO. CF1001101 | REV. - | APV -- --

DR J.ANCHETA | DATE 11.02.23

SCALE 1:1
DO NOT SCALE DRAWING.
UNLESS OTHERWISE SPECIFIED DIMENSIONS ARE IN INCHES.

THIS DRAWING IS THE PROPERTY OF VILLA INTERNATIONAL MFG. ALL RIGHTS RESERVED.

-	-	
-	-	

REVISIONS