CUT PATTERN	
BACK FRAME NO.	
BASE FRAME NO.	
WOOD PATTERN	

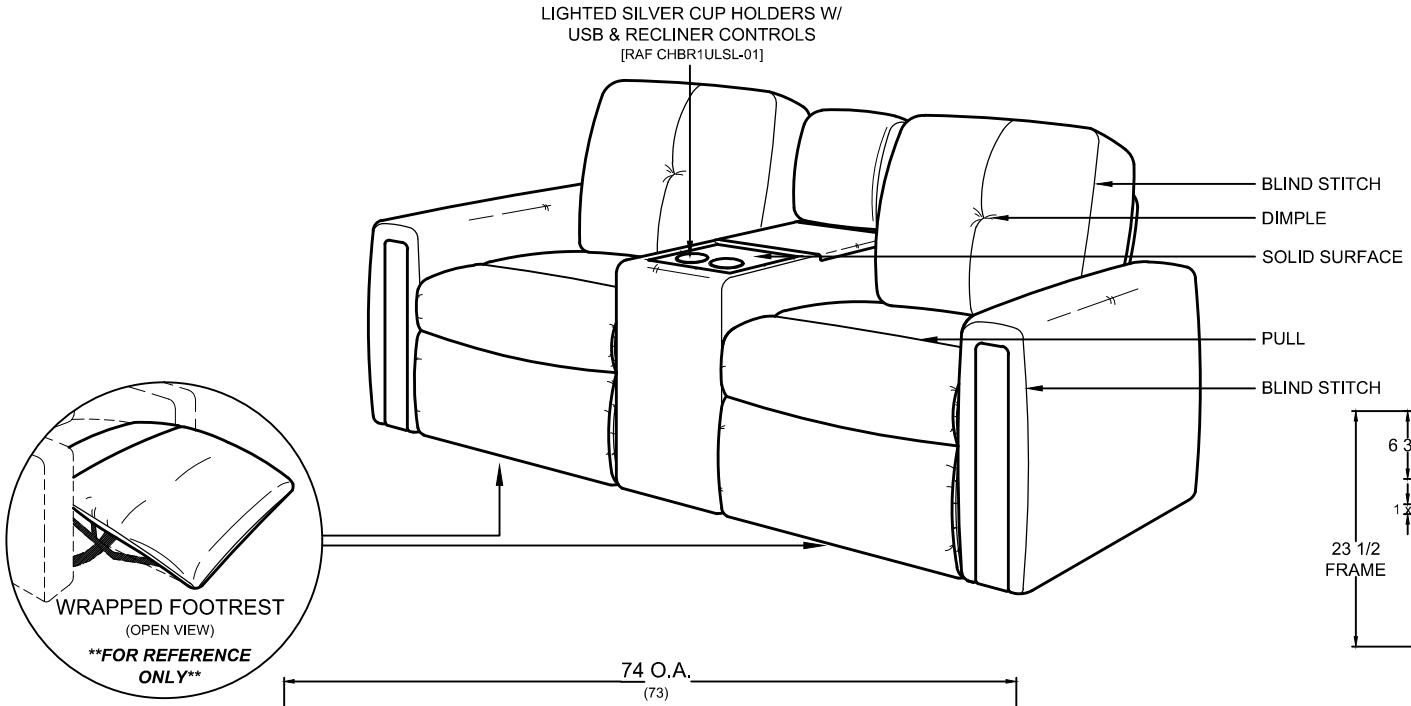

CONSOLE SECTION

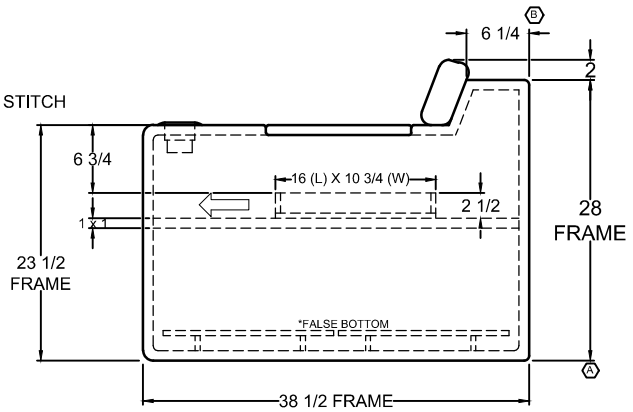

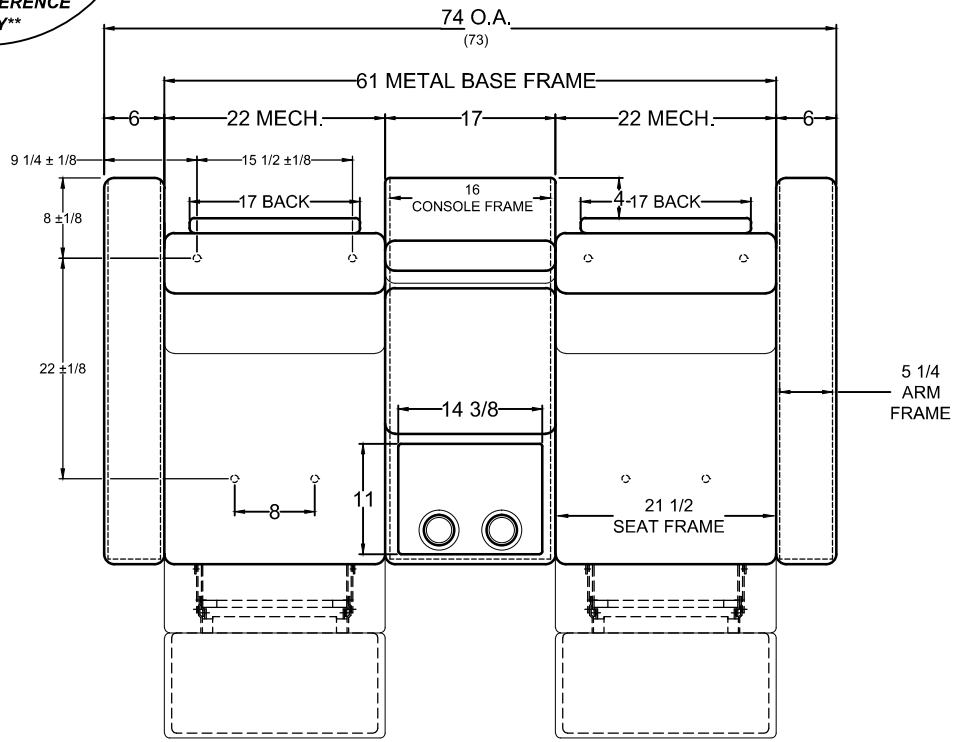

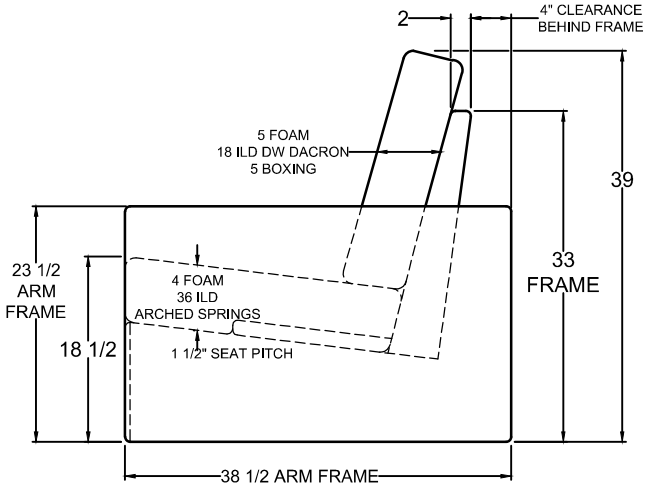

VILLA INTERNATIONAL
13760 Midway St.
Cerritos, CA 90703
Tel 562-404-8111
Fax 562-404-7781

TITLE	DWG. NO.	REV.	APV	SCALE 1:1
2026 LADP 74" HOME THEATER	VI7000754	B	RL 11.21.24	DO NOT SCALE DRAWING. UNLESS OTHERWISE SPECIFIED DIMENSIONS ARE IN INCHES.
	DR J.ANCHETA	DATE 11.20.24		

THIS DRAWING IS THE PROPERTY OF VILLA INTERNATIONAL MFG. ALL RIGHTS RESERVED.

JA	B	PER RL, CHANGE TOP OF BACK CONSOLE DEPTH TO 6-1/4"; WAS 4-3/4".	02.07.25
JA	A	CHANGE CENTER CONSOLE BACK FRAME HEIGHT TO 28"; WAS 33". (REF. ECO #003-20205)	01.08.24

REVISIONS