NOTES:

Maximum developed length - 70'
1/2" Black mall pipe
3/8" I.D. copper type "L"
Max. length of copper type to appliance per test
Propane Distribution System Complies With The Parameters Set By RVIA Test By Table 5.3.4 (NFPA 1192)
All brass fittings below floor to be forged--not milled
Maximum developed length of flex hose - 72"

| MAX BTU VALUES | |
|---|---|
| FURNACE | 40,000 |
| RANGE | 29,800 |
| REFRIGERATOR | 1,500 |
| WATER HEATER | 12,000 |
| TOTAL BTU | 85,300 |

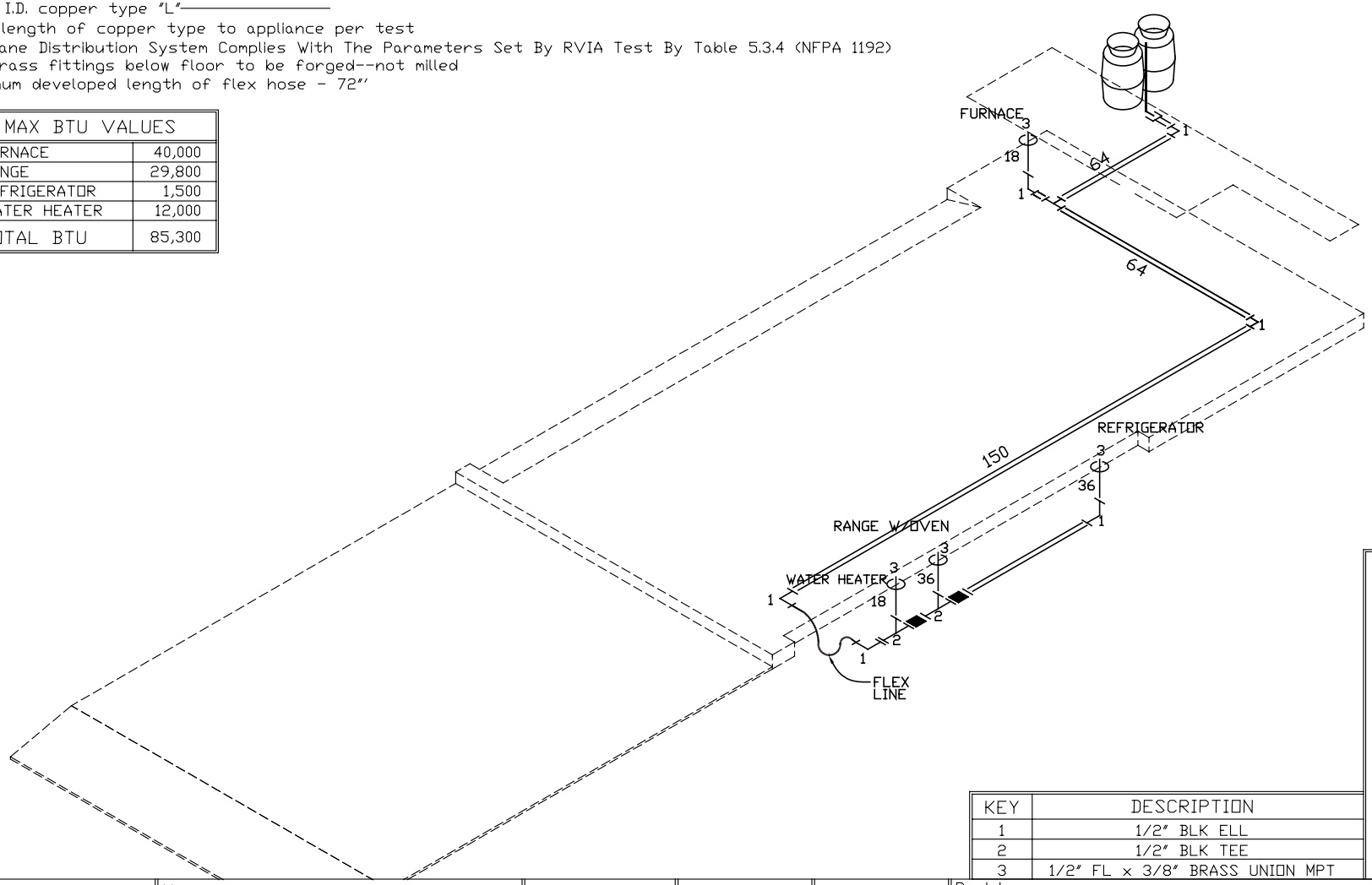


Mounting Clamp

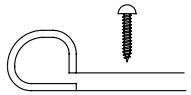

-Rubber Coated Steel Clamp Used To Secure Gas Manifold

-Plastic Clamp Used To Secure Copper Tubing

-Grommets Used To Protect Copper Through Floors, Walls, Cab. Partiti Etc.

| KEY | DESCRIPTION |
|---|---|
| 1 | 1/2" BLK ELL |
| 2 | 1/2" BLK TEE |
| 3 | 1/2" FL x 3/8" BRASS UNION MPT |

| | | | | | | |
|---|---|---|---|---|---|---|
| NEWMAR CORP<br>P.O. Box 30,<br>Nappanee, IN. 46550 | Model:<br>XAFW 40CKSH | Sheet<br>3 OF 3 | Drawn by:<br>T. M. | Checked by:<br>D. B. | Revision REV MAX BTU FOR FUNACE TO 40000 ILO 42000 (ECO #728) | By: M. B. |
| | | | | | | Date 9/9/08 |
| | Title:<br>PROPANE GAS | I.D. # 2009/<br>TOW/CODE/PLUM/XA/FW40CKSH | Date:<br>10/12/07 | Date:<br>10/26/07 | Revision: | By: |
| Title block--PB_TB-T4_08 | | | | | | Date: |