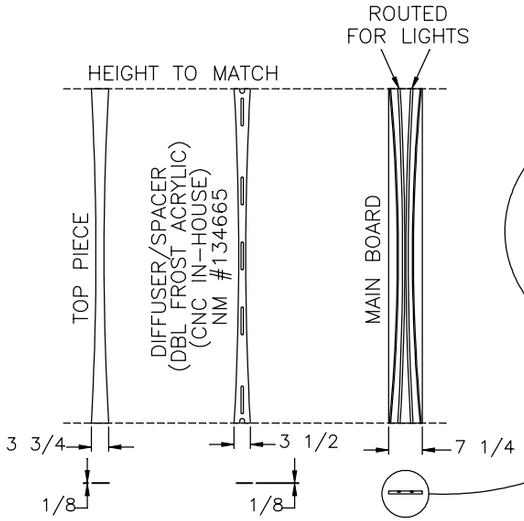

VERTICAL FASCIA

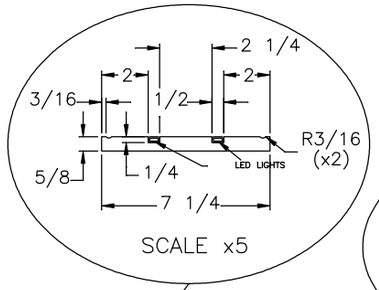

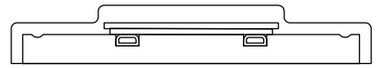

VERTICAL ASSEMBLY
END VIEW SCALED 10x

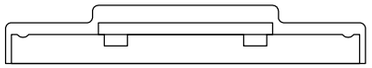

HORIZONTAL ASSEMBLY
END VIEW SCALED 10x

NOTE:
HORIZONTAL FASCIA IS 1/4" WIDER THAN VERTICAL FASCIA. MAX LENGTH IS 118".

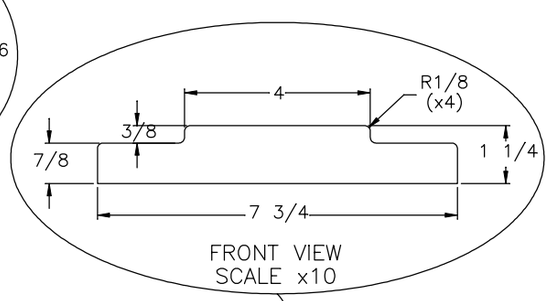

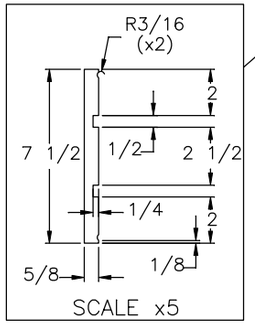

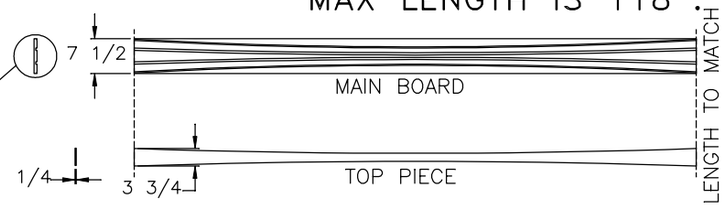

HORIZONTAL FASCIA
NO LIGHTS IN HORIZONTAL FASCIA

NOTE:
2 LIGHT STRIPS PER VERTICAL LEG

NOTE:
12" IS MAXIMUM THAT CAN BE CUT OFF (6" PER END)

END CAP/ HORIZONTAL DIVIDER PIECE
(USED W/ HORIZONTAL AND VERTICAL PIECES)
138928–CALYPSO MAPLE
140805–HARBOUR MAPLE
138929–ASTORIA MAPLE

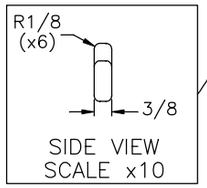

VERTICAL BASE SIZES

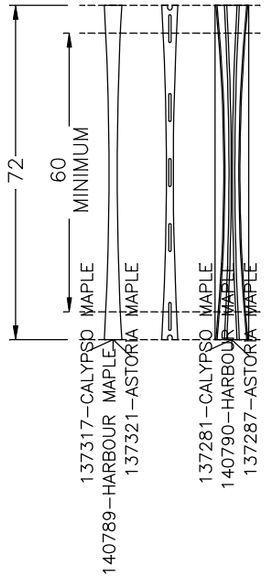

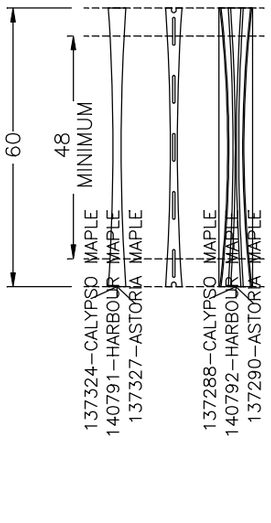

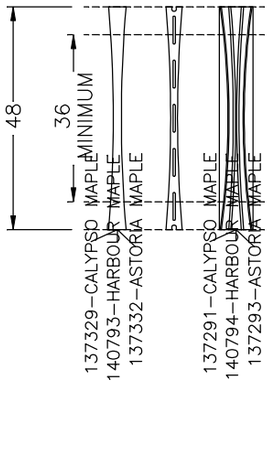

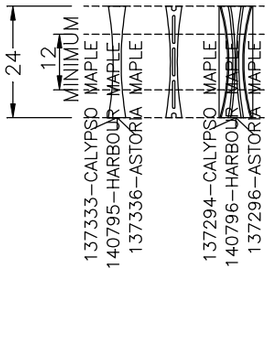

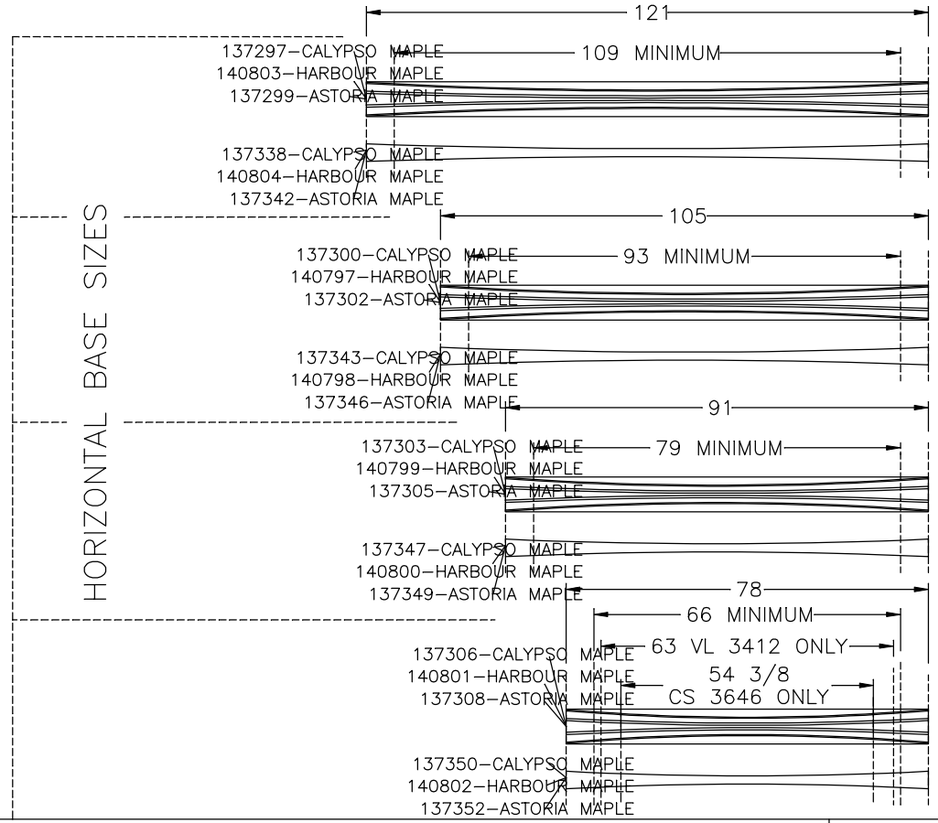

NEWMAR CORP *P.O. Box 30,* *Nappanee, IN. 46550*	Model: CSCA's/VLDP's	Sheet 1 OF 1	Drawn by: D. E.	Checked by: R. R.	Revision: Added note for horizontal fascia to cut down to 54 3/8 for CSCA 3646 only	By: R. W. Date:RR 1/10/18
UNITS: INCHES TITLE BLOCK: 75TB	Title: TYPICAL S–O FASCIA	I.D. # 2019\CA\SO\PARTS\CSCA_VLDPFASCIA	Date: 9/11/17	Date: 10/2/17	Revision:	By: Date: