DATE PRINTED: 31-Mar-05

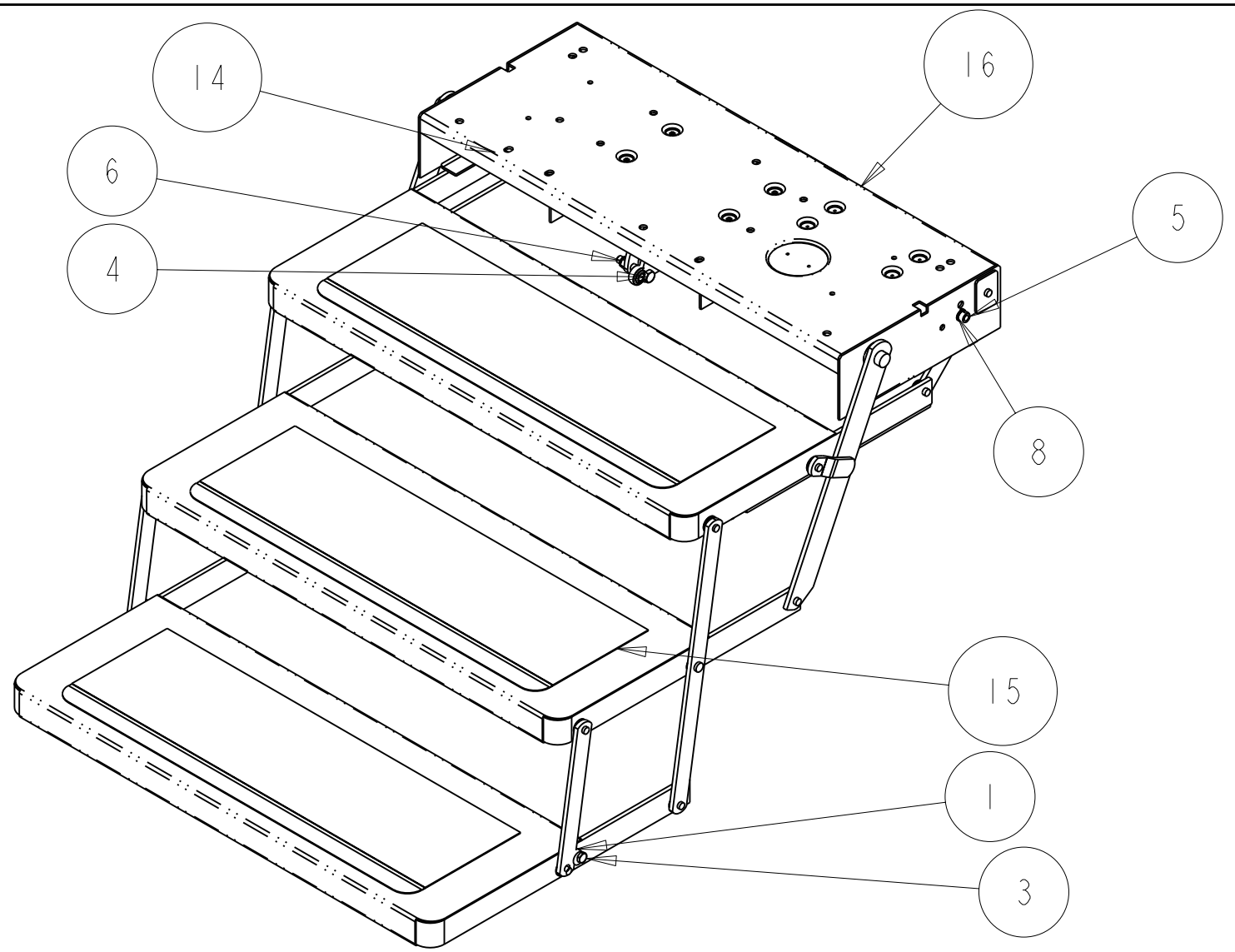

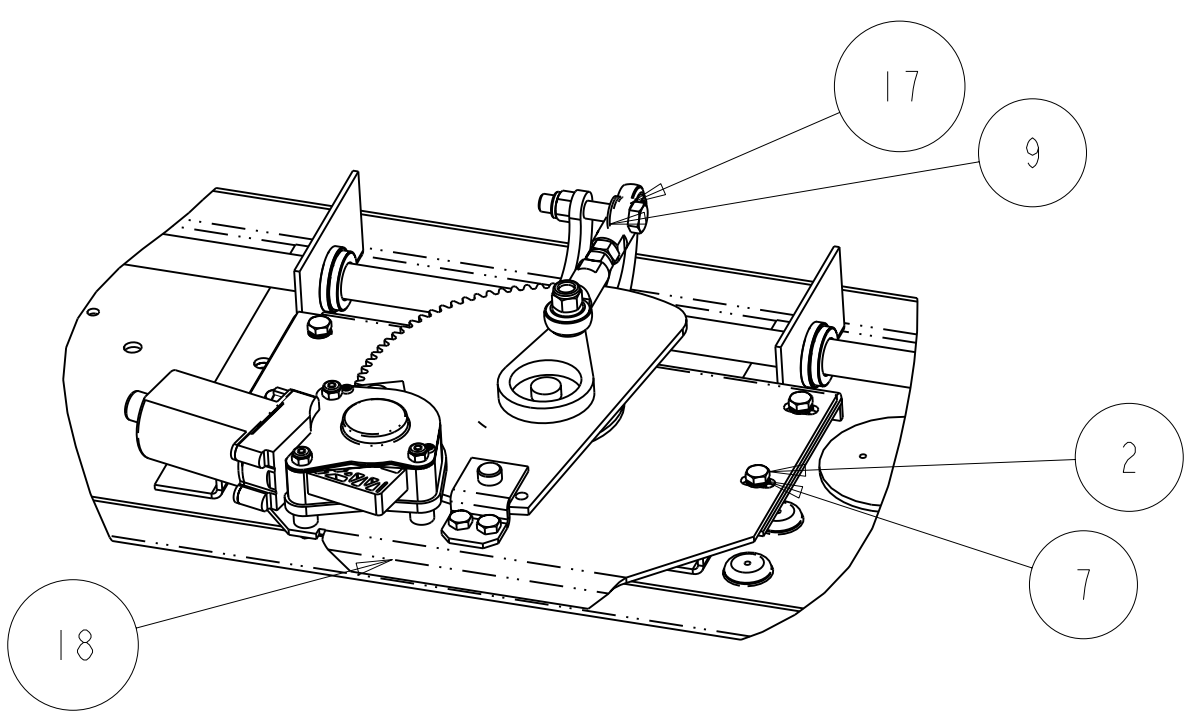

SCALE 0.250

BILL OF MATERIAL

Index	Part #	Description	QTY	UofM	Weight	Notes
1	1102200	CAM STOP	4	EA	.01578	SQ IN = 2.282
2	1203040	BOLT 1/4-20 X 3/4IN. HH GR.5	4	EA	0.02	
3	1203430	BOLT 5/16-18 X 1 HH GR 5	4	EA	.0298	
4	1203780	BOLT, 3/8-16 X 2 TAP	1	EA	0.08	
5	1205900	NUT, 5/16-18 HEX	4	EA	0.01	
6	1206210	NUT, 3/8-16 NYLOCK	2	EA	0.02	
7	1209420	WASHER 1/4 SPLIT LOCK	4	EA	0.00	
8	1209730	WASHER, 5/16 SPLIT LOCK	4	EA	0.01	
9	1210060	WASHER .390 X .750 X .050 NYLON	4	EA	0.00	
10	1413020	LABEL ROLL 2 1/2 X 7/8 # 9800-204	1	EA		
11	1413040	LABEL ROLL 4 X 1 7/8 #9800-214	1	EA		
12	1414400	LABEL KWIKEE LOGO SILVER	1	EA		
13	1414620	LABEL LUBE STEP	1	EA		
14	1602000	BUMPER BLACK RUBBER STOP	6	EA	0.00	
15	1915270	NON-SKID TREAD 8X25 BLK REFLECTIVE STEPS	3	EA	.307	
16	3202030	FRAME ASSEBLY PAINTED 24 ELECTRIC STEPS	1	EA	72.74	SQ. IN.=4586.935
17	3380050	LINK ASSEMBLY 24/25 ELECTRIC STEPS	1	EA	0.47	
18	3392152	MOTOR TABLE 24/25 AM EQUIPMENT 214	1	EA	8.16	
		Total Weight			87.7	

902400900 = NO CONTROL
902409000 = W/1800707 CONTROL

2

MATERIAL:	SEE BOM
FINISH:	N/A
WEIGHT:	87.747

SHEET 1 OF 2

Rev	ECO No.	Date	Description	By
2	7455	8/26/05	ADDED 902409000	RWR

Revisions

UNLESS OTHERWISE SPECIFIED DIMENSIONS ARE IN INCHES.
TOLERANCES ARE...
.X ±.1
.XX ±.030
.XXX ±.010
FRACTIONS ±1/16
ANGULAR ±.5°
DO NOT SCALE DRAWING
MODEL FILENAME: 902400900 PART NUM PARAMETER: 902400900

ELECTRIC STEPS | PRODUCTION
Product | Release Level
Application
Third Angle Projection
Title
902400900 ASSEMBLY
ELECTRIC STEP

Drawn by: RWR
Checked by:
Scale: NTS
Date: 31-Mar-05
Size B

Kwikee Products Company Inc.
230 Davidson Ave.
Cottage Grove, OR 97424

Drawing Number: 902400900
Rev 2

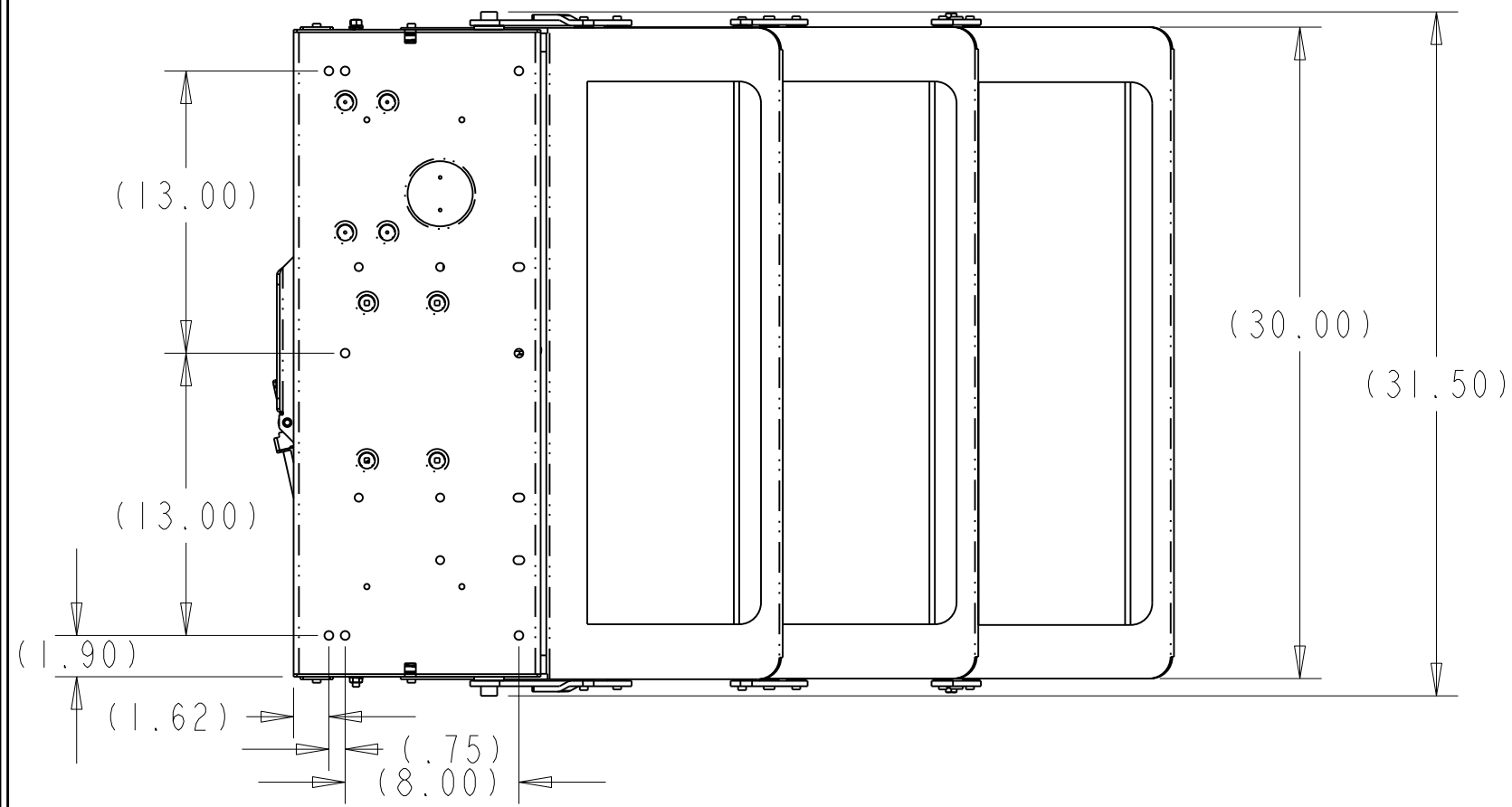

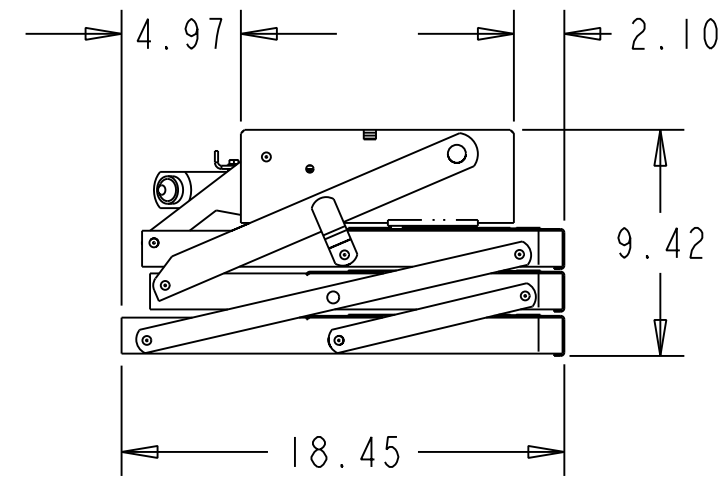

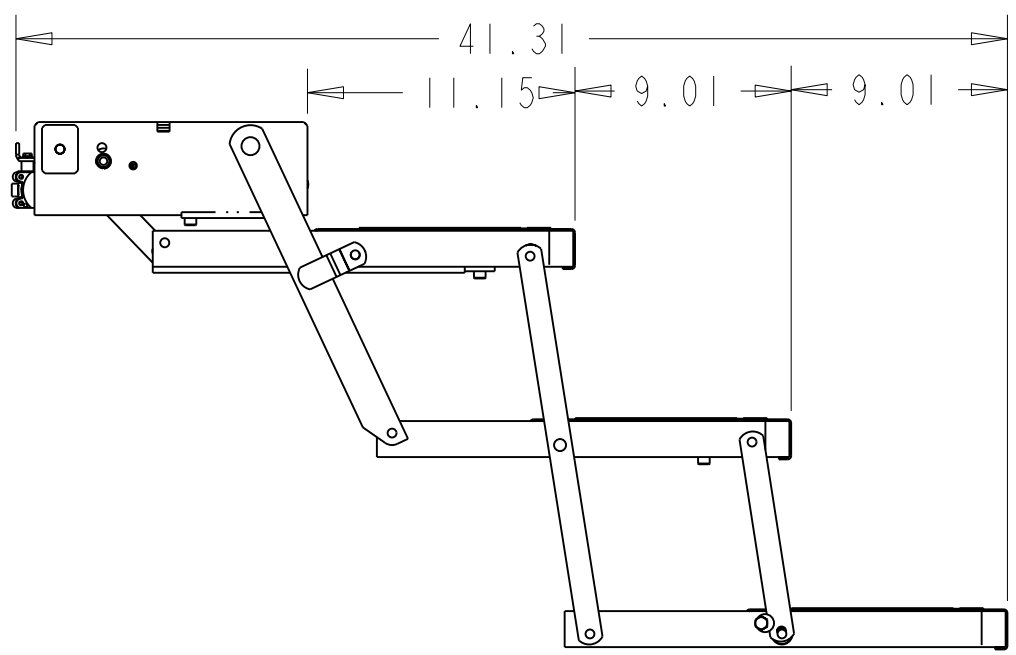

SCALE 0.125

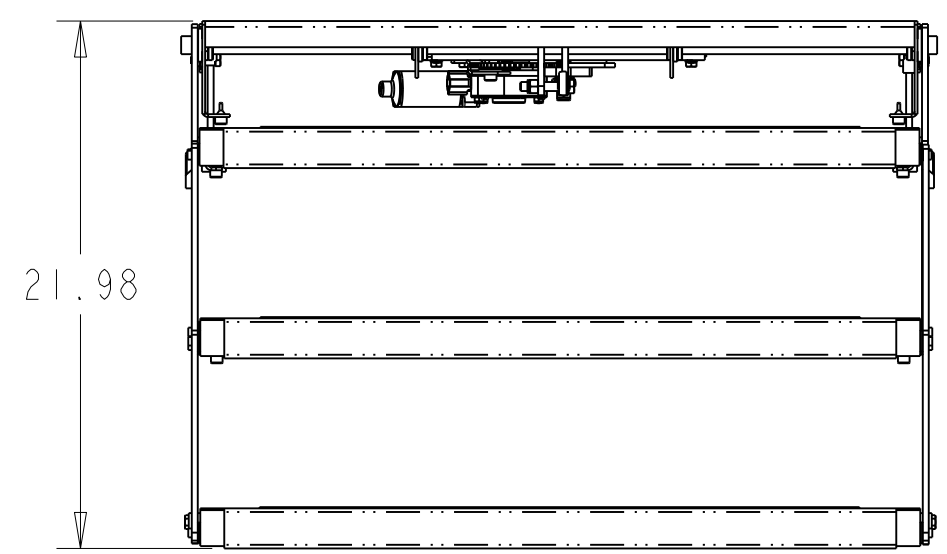

SHEET 2 OF 2

MATERIAL:	SEE BOM
FINISH:	N/A
WEIGHT:	87.747

UNLESS OTHERWISE SPECIFIED DIMENSIONS ARE IN INCHES.
TOLERANCES ARE...
.X ±.1
.XX ±.030
.XXX ±.010
FRACTIONS ±1/16
ANGULAR ±.5°
DO NOT SCALE DRAWING
MODEL FILENAME: 902400900
PART NUM PARAMETER: 902400900

ELECTRIC STEPS | PRODUCTION
Product | Release Level
Application
Third Angle Projection

Title
902400900 ASSEMBLY
ELECTRIC STEP

Kwikee Products Company Inc.
230 Davidson Ave.
Cottage Grove, OR 97424

Drawn by: RWR | Scale: NTS | Size B | Drawing Number: 902400900 | Rev 2
Checked by: | Date: 31-Mar-05