Dirt Devil®

CV950
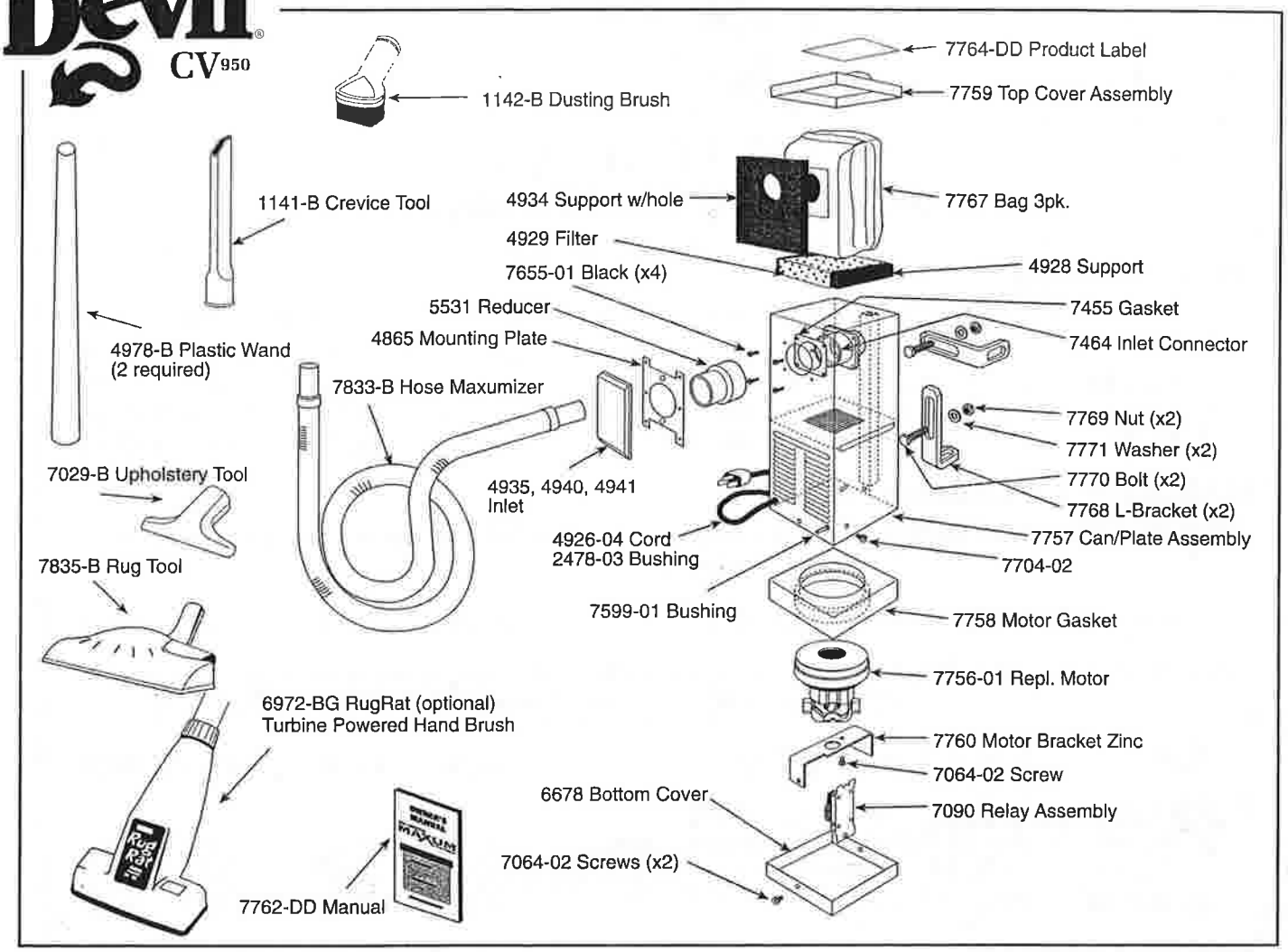
HIGH PERFORMANCE CENTRAL CLEANING SYSTEM