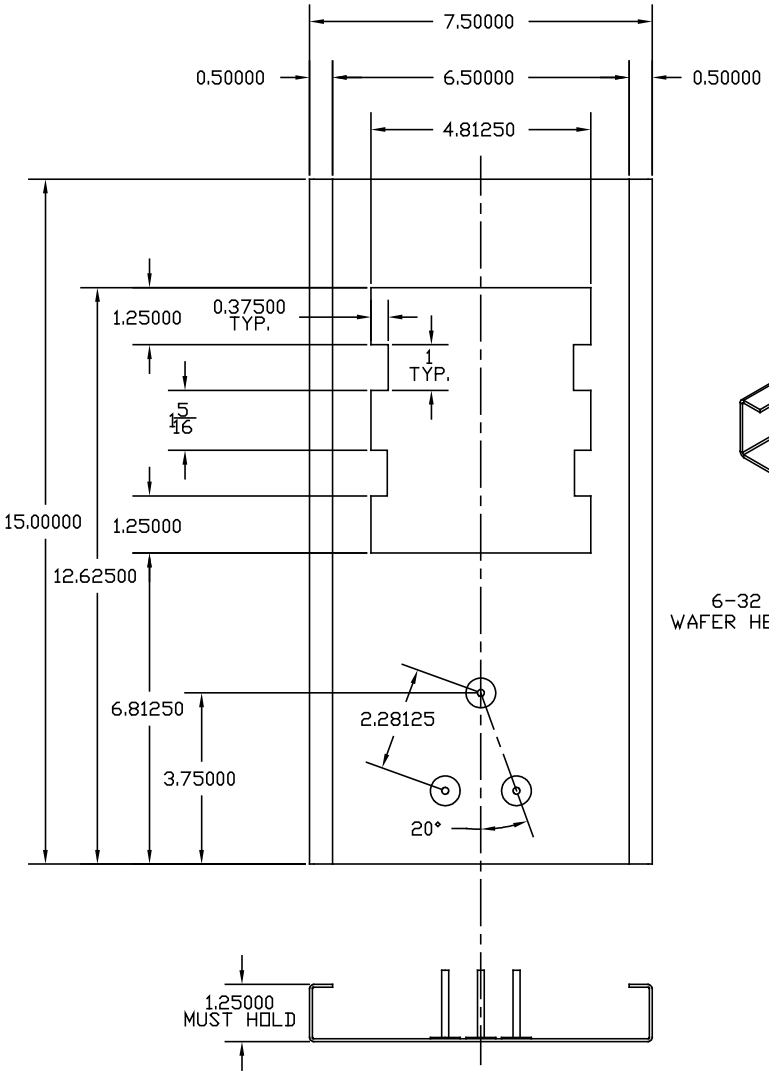

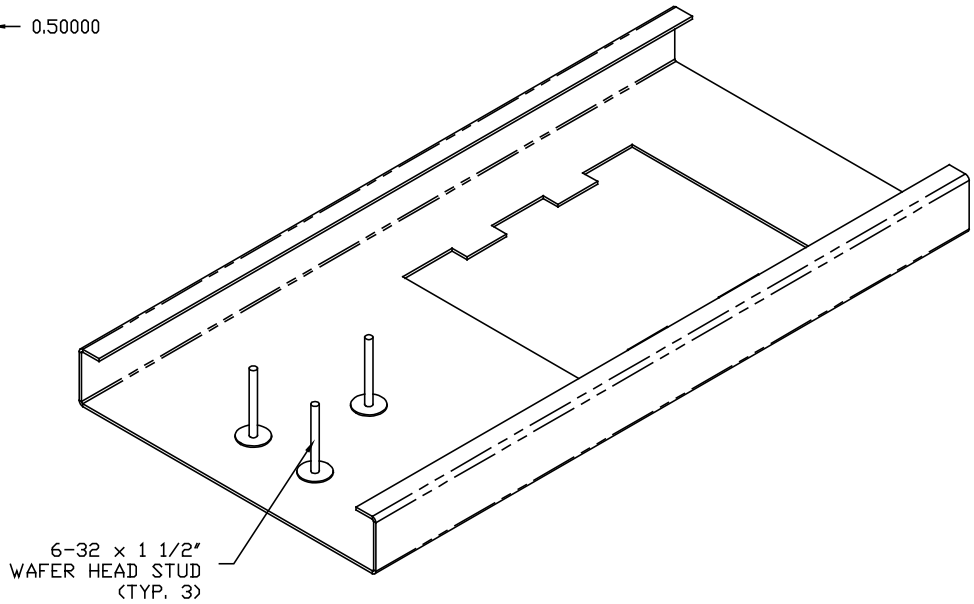

1/16" STEEL
PAINT BLACK
NEWMAR PN: 70927