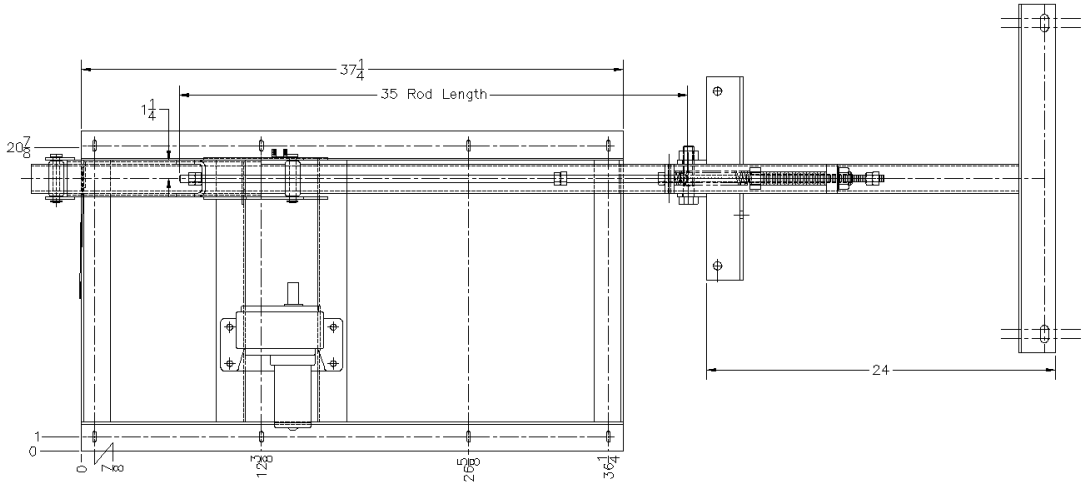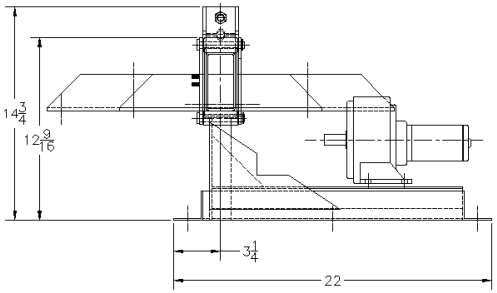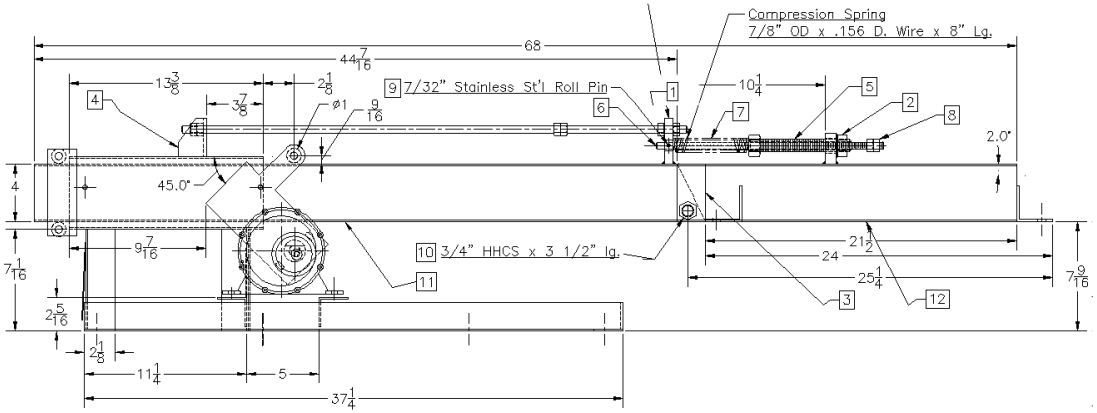#	Qty	Nwmr#	Description
1	1	85421	5/8" x 2 x 3 3/16" HRPD Flat
2	1	69137	3/4" 2" x 2 1/8" HRPD Flat w/7/8-9 Hex Nut
3	2	69138	1/4" 2" x 4" HRPD Flat
4	1	85420	2" x 2 1/2" x 2" x 2 5/8" Formed Chnl
5	1	69140	7/8"-9 Threaded Tube w/7/8"-9 Hex Nut
6	1	69141	1/2" CR Round x 15 3/4" w/4" 1/2-13 Th'd O.E.
7	1	69142	1" O.D. x .156 Wire x 8" Coiled Spring
8	2	11801	1/2-13 GR5 Hex Nut Zinc PL
9	1	69143	7/32" x 2" Stainless St'l Coiled Roll Pin
10	1	69144/69145	3/4"-16 GR5 HHCS x 3 1/2" lg. w/ 3/4" GR5 Nut
11	1	71030	Actuator Tube 2 x 4 x 11 Ga. x 46 1/2" Mitered
12	1	71031	Actuator Tube 2 x 4 x 11 Ga. x 23 1/4" Mitered