ITEM #	QTY	NEWMAR #	DESCRIPTION
1	1	113195	BOWL GEMSTONE 16x16 BONE
2	1	113196	BOWL GEMSTONE 10x16 BONE
3	1	124108	COOKTOP TRUE INDUCTION 2 BURNER ELEC
4	1	120364	DISHWASHER

PLEASE ACKNOWLEDGE AND DATE THE FOLLOWING ORDER/PRINT FOR APPROVAL TO BUILD, AND FAX TO NEWMAR (AT 574-773-2895) AS SOON AS POSSIBLE

DATE:_____

SIGN:_____

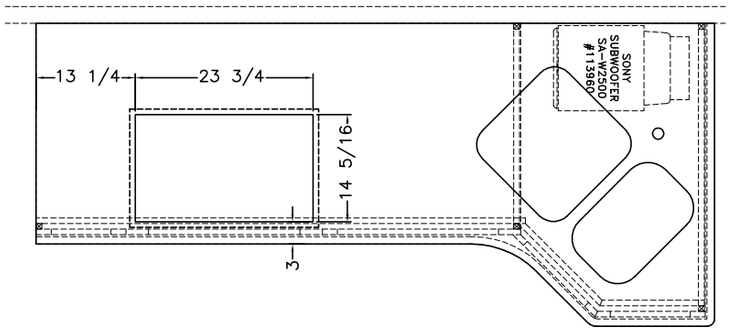

1/2" THICKNESS

SEE TYPICAL PRINT FOR COUNTER TOP APPLICATION

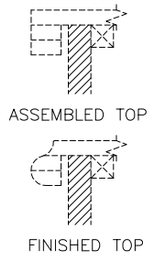

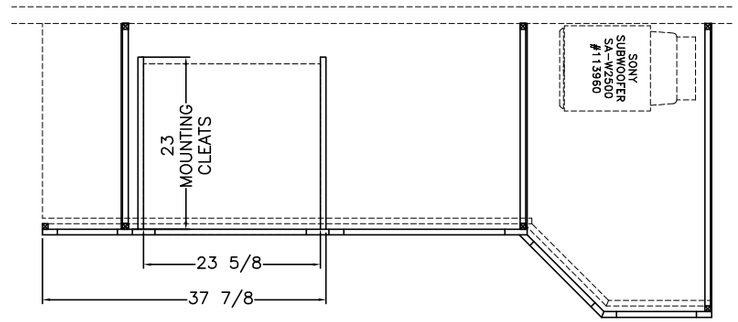

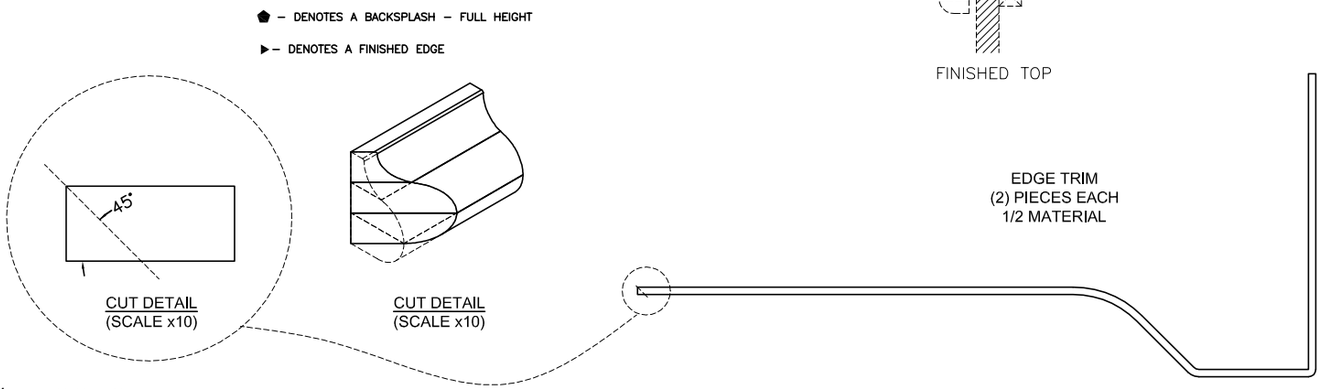

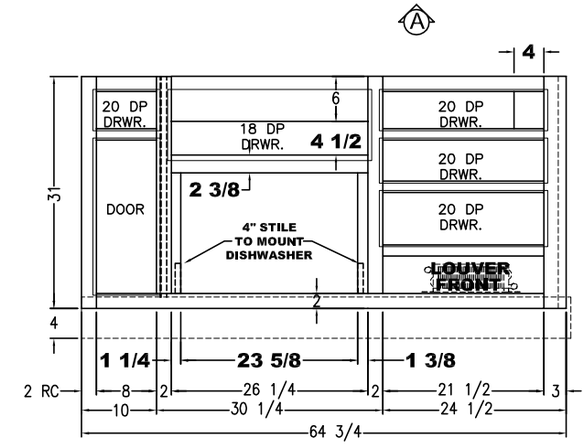

VIEW Ⓐ

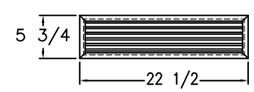

(1) 5 3/4x9 FRONT
(1) 9x21 DOOR

(1) 9 1/2x27 1/4 FRONT
(2) 5 3/4x22 1/2 FRONTS
(1) 7 3/4x22 1/2 FRONT

(1) 22 1/2 X 5 3/4 LOUVERED VENT RA THRU TOE KICK

UNIT: # 412250
DEALER: DICK GORES RV
SPECIAL: # 407

NEWMAR CORP *P.O. Box 30, Nappanee, IN. 46550*	Model: VT DP 4041 (J520)	Sheet 1 OF 1	Drawn by: A. M.	Checked by: L. D. B.	Revision:	By:
						Date:
	Title: 89 3/8 KIT S-O BASE	I.D. # 2016\SPECIALS\MOT\407KT	Date: 6/18/15	Date: 6/18/15	Revision:	By:
Title block--75TB						Date: