| ITEM # | QTY | NEWMAR # | DESCRIPTION |
|---|---|---|---|
| 1 | 1 | 120364 | DISHWASHER |

PLEASE ACKNOWLEDGE AND DATE THE FOLLOWING ORDER/PRINT FOR APPROVAL TO BUILD, AND FAX TO NEWMAR (AT 574-773-2895) AS SOON AS POSSIBLE

DATE:_____

SIGN:_____

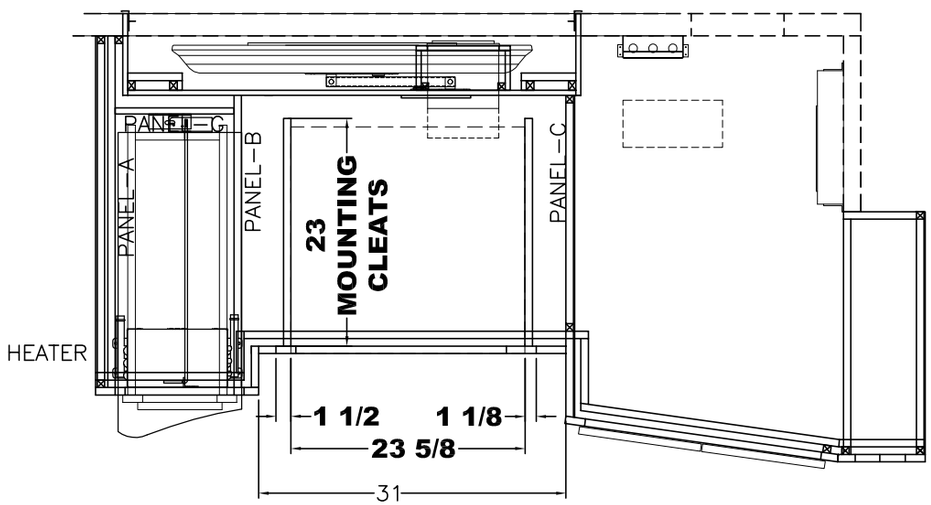


B

PLAN

(J520) (J525)

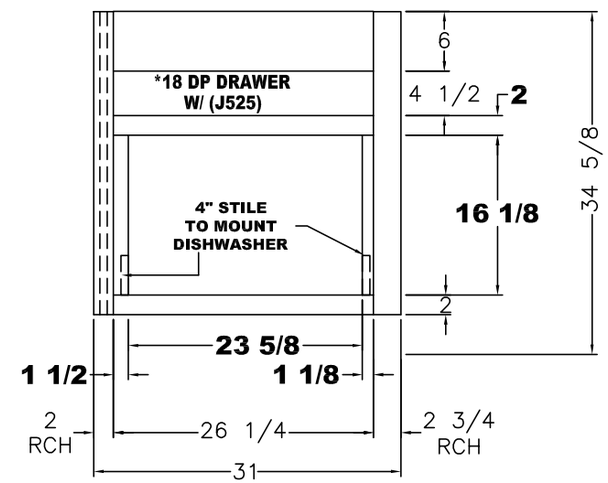


VIEW B

(1) 9 X 27 1/4 FRONT

(J525)(J520)

UNIT: # 412662
DEALER: Tampa RV
SPECIAL: # 1388

| | | | | | | |
|---|---|---|---|---|---|---|
| NEWMAR CORP<br>P.O. Box 30,<br>Nappanee, IN. 46550 | Model: (J520)(J525)<br>VT DP 4037 | Sheet<br>1 OF 1 | Drawn by:<br>Z. R. | Checked by:<br>A. M. | Revision: | By: |
| | | | | | | Date: |
| UNITS: INCHES | Title:<br>75 1/2 KIT S-O BASE | I.D. # 2016\SPECIALS\MOT\1388KT | Date:<br>2/23/16 | Date:<br>2/25/16 | Revision: | By: |
| TITLE BLOCK--75TB | | | | | | Date: |