ITEM #	QTY	NEWMAR #	DESCRIPTION
1	1	113960	SONY SUB-WOOFER
2	1	**120364**	**DISHWASHER**

PLEASE ACKNOWLEDGE AND DATE THE FOLLOWING ORDER/PRINT FOR APPROVAL TO BUILD, AND FAX TO NEWMAR (AT 574-773-2895) AS SOON AS POSSIBLE

DATE:_____

SIGN:_____

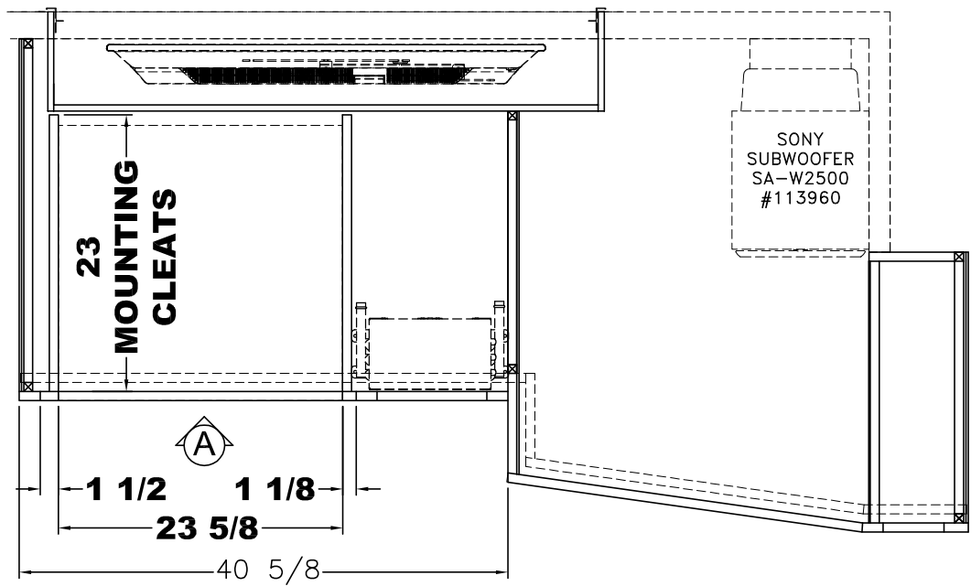

PLAN
(J525)

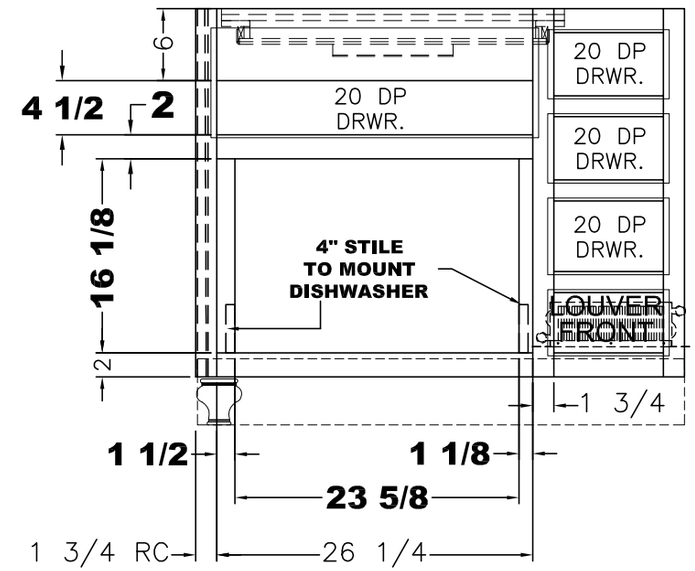

VIEW (A) J550

(1) 9 1/8x27 1/4 FRONT
(2) 5 3/4x10 1/8 FRONTS
(1) 6 3/8x10 1/8 FRONT

UNIT: # 412950
DEALER: North Trail RV
SPECIAL: # 837

NEWMAR CORP P.O. Box 30, Nappanee, IN. 46550	Model: (J550)(J525) VT DP 4310	Sheet 1 OF 1	Drawn by: Z. R.	Checked by: A. M.	Revision:	By:
						Date:
UNITS: INCHES	Title: 70 5/8 KITCHEN CABINETS	I.D. # 2017\SPECIALS\MOT\837KT	Date: 8/31/16	Date: 9/1/16	Revision:	By:
TITLE BLOCK: 75TB						Date: