ITEM #	QTY	NEWMAR #	DESCRIPTION
1	1	113960	SONY SUB-WOOFER
2	1	120364	DISHWASHER

PLEASE ACKNOWLEDGE AND DATE THE FOLLOWING ORDER/PRINT FOR APPROVAL TO BUILD, AND FAX TO NEWMAR (AT 574-773-2895) AS SOON AS POSSIBLE

DATE:_____

SIGN:_____

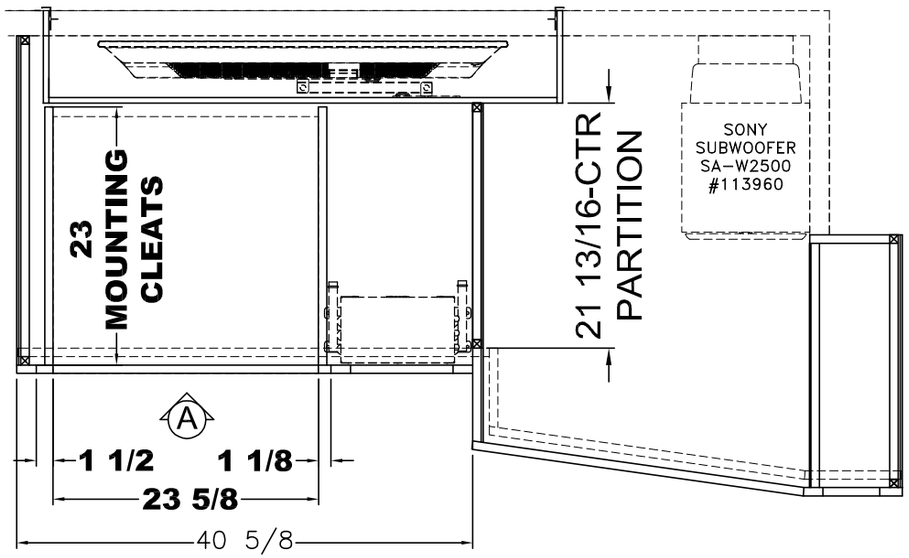

PLAN

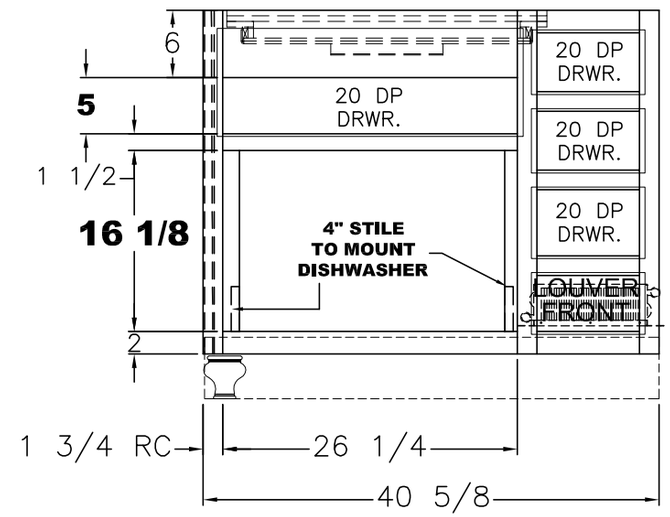

VIEW (A)

(1) 10 1/4x27 1/4 FRONT
(2) 7 3/4x27 1/4 FRONTS
(2) 5 3/4x10 1/8 FRONTS
(1) 6 3/8x10 1/8 FRONT

UNIT: # 413019
DEALER: North Trail RV
SPECIAL: # 1069

PLAN

NEWMAR CORP P.O. Box 30, Nappanee, IN. 46550	Model: (J525)(J550) VT DP 4326	Sheet 1 OF 1	Drawn by: Z. R.	Checked by: A. M.	Revision:	By:
						Date:
UNITS: INCHES	Title:	I.D. # 2017\SPECIALS\MOT\1069KT	Date:	Date:	Revision:	By:
TITLE BLOCK: 75TB	70 5/8 KITCHEN CABINETS		9/23/16	9/26/16		Date: