ITEM #	QTY	NEWMAR #	DESCRIPTION
1	1	**113200**	**BOWL CORIAN LAV 10" BONE (C75700 BONE)**
2	1	126572	VALVE

PLEASE ACKNOWLEDGE AND DATE THE FOLLOWING ORDER/PRINT FOR APPROVAL TO BUILD, AND FAX TO NEWMAR (AT 574-773-2895) AS SOON AS POSSIBLE

DATE:_____

SIGN:_____

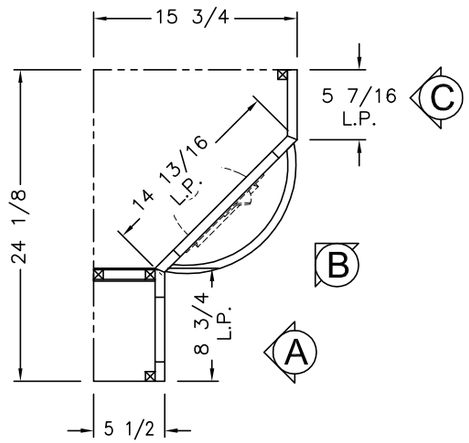

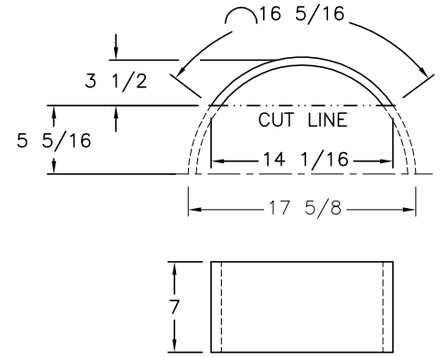

APRON DETAIL

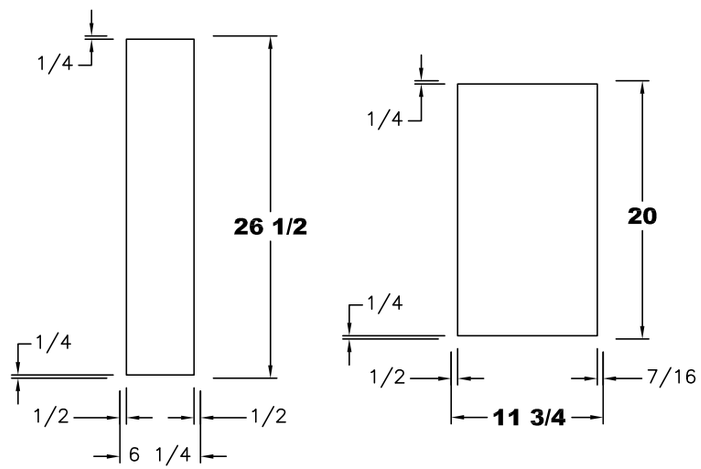

DOOR OVERLAYS

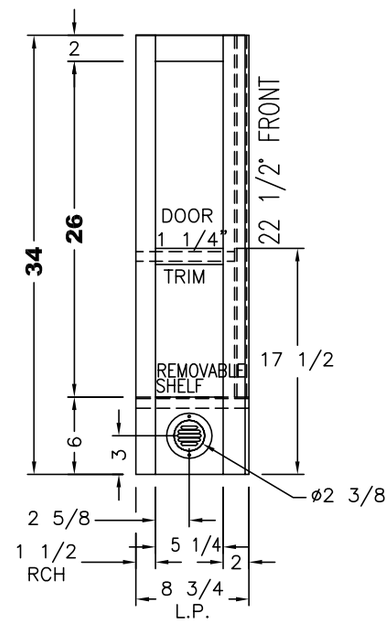

VIEW A

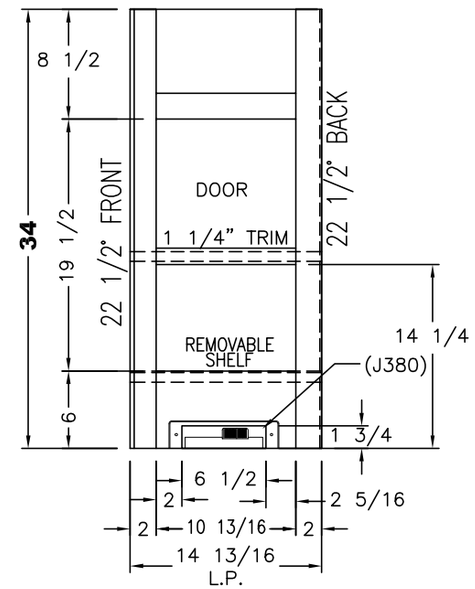

VIEW B

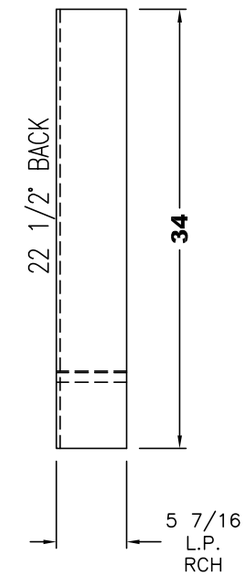

VIEW C

(1) 6 1/4 x 26 1/2 DOOR
(1) 11 3/4 x 20 DOOR

UNIT: # 413063
DEALER: Transwest Truck, CO
SPECIAL: # 1217

NEWMAR CORP **P.O. Box 30, Nappanee, IN. 46550**	Model: VT DP 3709 (J380)	Sheet 1 OF 2	Drawn by: Z. R.	Checked by: A. M.	Revision: / By: / Date:
UNITS: INCHES	Title: 24 1/8 LAV BASE & TOP	I.D. # 2017\SPECIALS\MOT\1217LV	Date: 10/18/16	Date: 10/18/16	Revision: / By: / Date:
TITLE BLOCK: 1TB					

ITEM #	QTY	NEWMAR #	DESCRIPTION
1	1	**113200**	**BOWL CORIAN LAV 10" BONE (C75700 BONE)**
2	1	126572	VALVE

PLEASE ACKNOWLEDGE AND DATE THE FOLLOWING ORDER/PRINT FOR APPROVAL TO BUILD, AND FAX TO NEWMAR (AT 574-773-2895) AS SOON AS POSSIBLE

DATE:_____

SIGN:_____

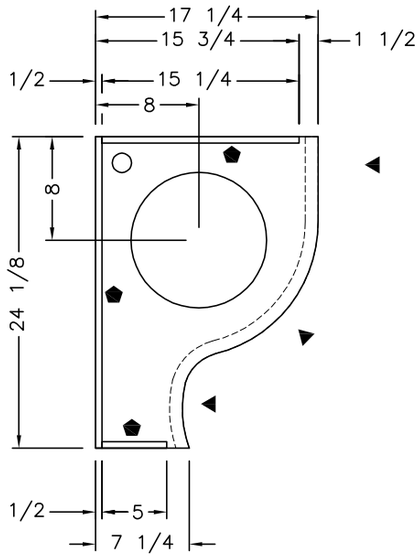

1/2 LAV TOP

▶ – DENOTES A FINISHED EDGE

⬟ – DENOTES A SHORT BACKSPLASH

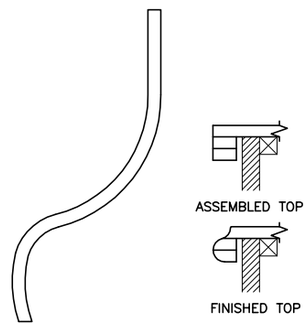

EDGE TRIM

(2) PIECES 1/2 MATERIAL

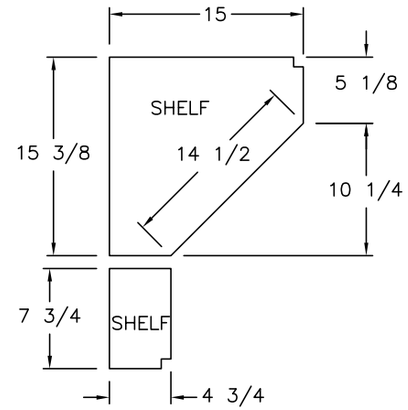

SOLID DENOTES 3/8" RECESS FOR TILE INLAY

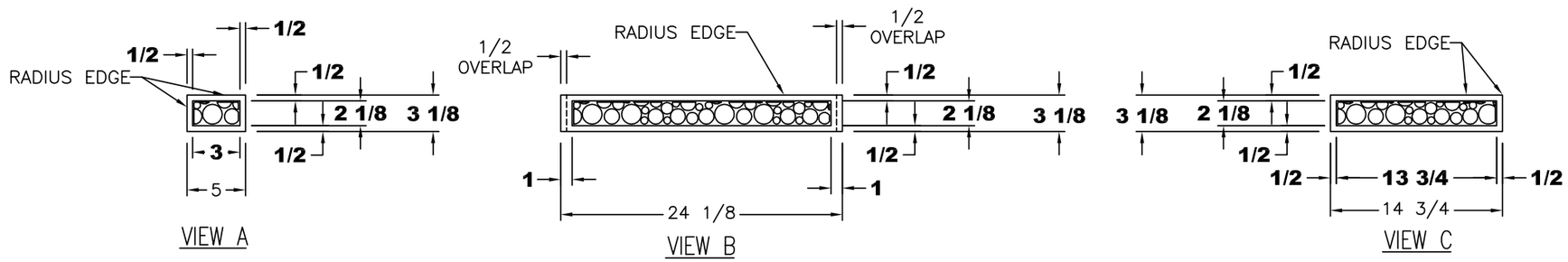

CORIAN BACKSPLASH

UNIT: # 413063
DEALER: Transwest Truck, CO
SPECIAL: # 1217

NEWMAR CORP **P.O. Box 30, Nappanee, IN. 46550**	Model: VT DP 3709	Sheet 2 OF 2	Drawn by: Z. R.	Checked by: A. M.	Revision:	By:
						Date:
UNITS: INCHES	Title: 24 1/8 LAV BASE & TOP	I.D. # 2017\SPECIALS\MOT\1217LV	Date: 10/18/16	Date: 10/18/16	Revision:	By:
TITLE BLOCK: 1TB						Date: