| ITEM # | QTY | NEWMAR # | DESCRIPTION |
|---|---|---|---|
| 1 | 1 | 130238 | REFER WHIRLPOOL (WRF560SEYM) |
| 2 | – | 130554 | ACCENT WALL PNL VANCOUVER |
| 3 | – | 130551 | ACCENT WALL PNL DAKAR |
| 4 | – | 130553 | ACCENT WALL PNL SAO PAOLO |
| 5 | – | 130686 | TRIM (MAPLE) |
| 6 | – | 130687 | TRIM (CHERRY) |
| 7 | 1 | 131070 | PULL OUT PANTRY KIT 16 1/4 |
| 8 | 1 | 134825 | REFRIG BRACKET (LEFT) |
| 9 | 1 | 134828 | REFRIG BRACKET (RIGHT) |

PLEASE ACKNOWLEDGE AND DATE THE FOLLOWING ORDER/PRINT FOR APPROVAL TO BUILD, AND FAX TO NEWMAR (AT 574-773-2895) AS SOON AS POSSIBLE

DATE:_____

SIGN:_____

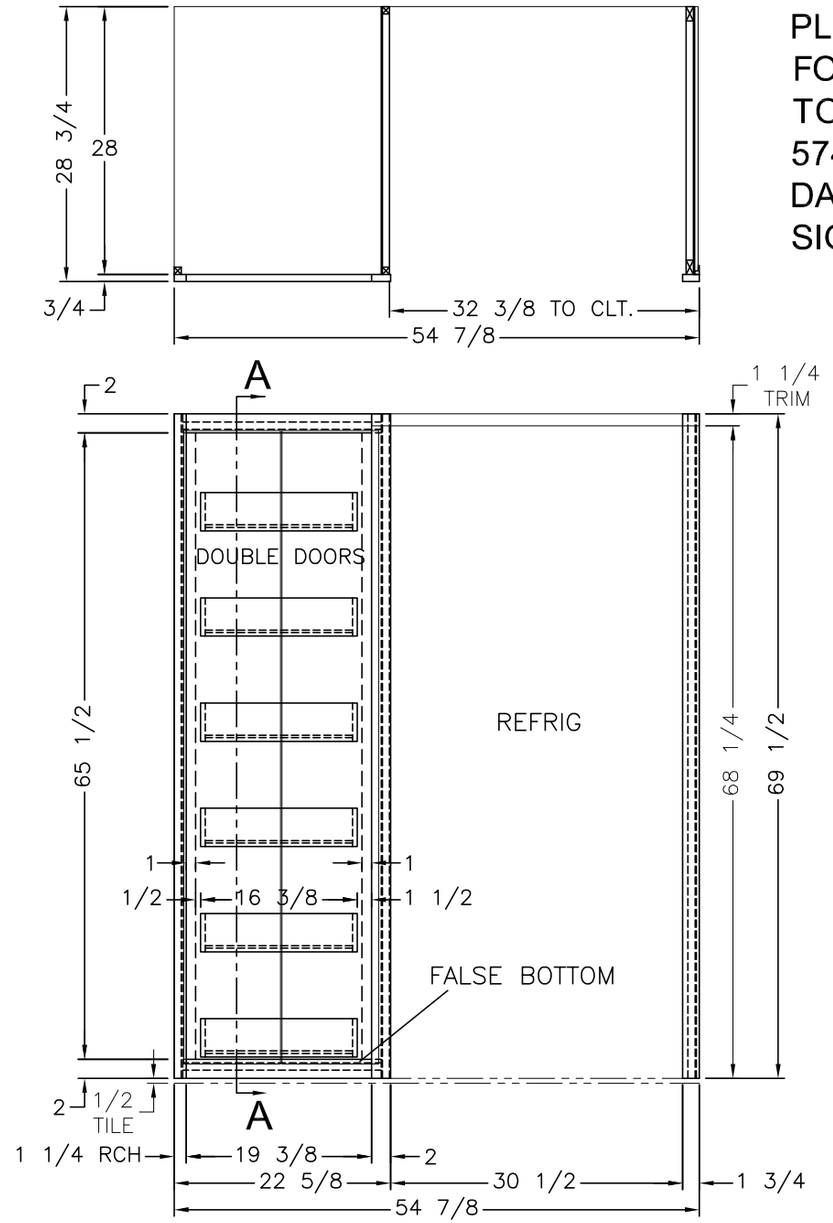


FRONT VIEW

UNIT: # 530391

DEALER: National Indoor RV

SPECIAL: # 844

| | | | | | | |
|---|---|---|---|---|---|---|
| NEWMAR CORP<br>P.O. Box 30,<br>Nappanee, IN. 46550 | Model:<br>KG DB 4519 | Sheet<br>1 OF 1 | Drawn by:<br>Z. R. | Checked by:<br>A. M. | Revision: | By: |
| | | | | | | Date: |
| UNITS: INCHES | Title:<br>REFRIGERATOR/PANTRY | I.D. # 2017\SPECIALS\MOT\844RF | Date:<br>9/6/16 | Date:<br>9/7/16 | Revision: | By: |
| TITLE BLOCK: 1TB | | | | | | Date: |