ITEM #	OPTION	NEWMAR #	DESCRIPTION
1	–	136869	WALL CLOCK
2	J775	146572	WHIRLPOOL 19.7CU W/WATER
3	J775	134825	WHIRLPOOL REFRIGERATOR BRACKET LEFT SIDE
4	J775	134828	WHIRLPOOL REFRIGERATOR BRACKET RIGHT SIDE
5	–	**142410**	KNOB PUSH W/LATCH CROME
6	–	**147447**	DOOR LATCH BRACKET
7	–	**147983**	SCREW 6/32X1/2 PHOL FLAT ZIN
8	–	**147984**	NUT NYLOC MACH SC ZINC 6/32

PLEASE ACKNOWLEDGE AND DATE THE FOLLOWING ORDER/PRINT FOR APPROVAL TO BUILD, AND FAX TO NEWMAR (AT 574-773-2895) AS SOON AS POSSIBLE

DATE:_____

SIGN:_____

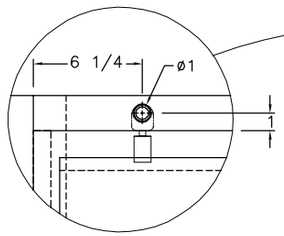

SCALED X2

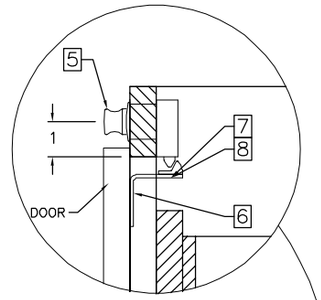

TRAVEL LATCH
SCALED X4

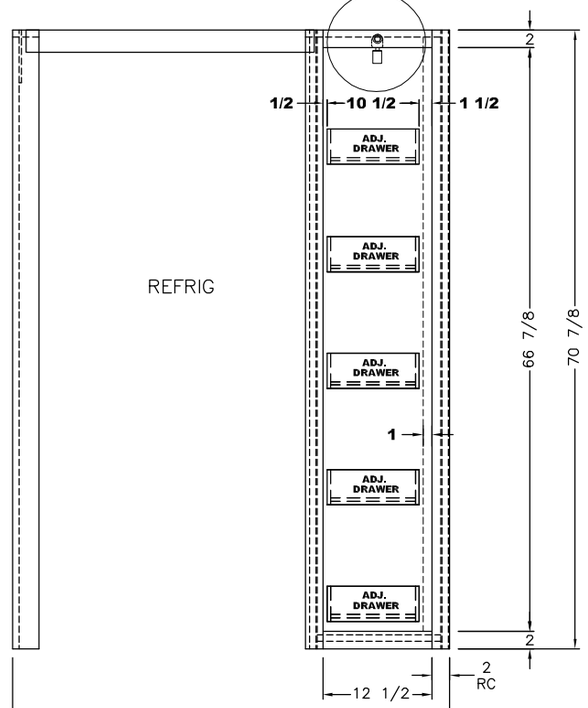

FRONT VIEW

(1) 13 1/2x67 5/8 DOOR

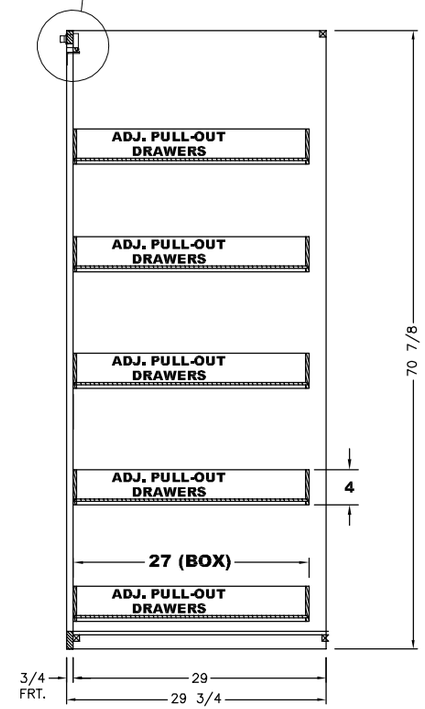

SIDE SECTION

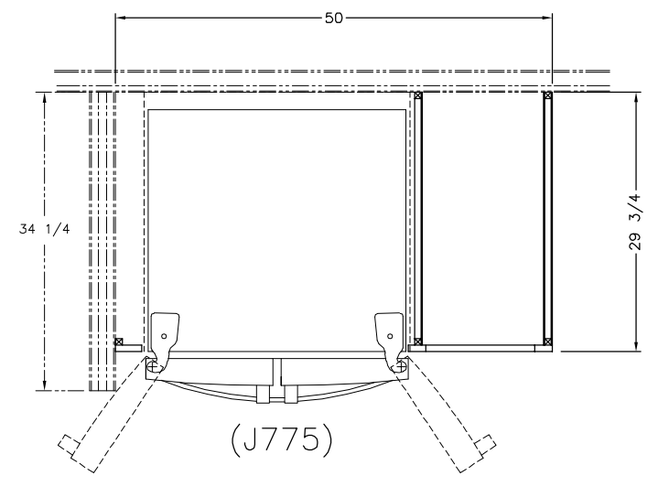

UNIT: # 750119
DEALER: Daves RV
SPECIAL: # 123

NEWMAR CORP P.O. Box 30, Nappanee, IN. 46550	Model: KS DP 4037 (J775)	Sheet 1 OF 1	Drawn by: R. N.	Checked by: Z. R.	Revision: / By: / Date:
UNITS: INCHES	Title: 50 REFRIGERATOR /PANTRY	I.D. # 2020\SPECIALS\MOT\123RF	Date: 10/18/19	Date: 10/21/19	Revision: / By: / Date:
TITLE BLOCK: 1TB					